© Siemens AG 2018

Overview

All shut-off fittings can be secured onto walls, racks (72 mm grid) and vertical and horizontal pipes.

This offers the advantage when assembling a plant that the shut-off fittings can be secured first and the lines for the medium and differential pressure connected to them. It is then possible to check all connections for leaks and to blow out or flush the pipes in order to remove dirt (welding residues, shavings etc.).

The measuring instruments can be screwed onto the shut-off fittings right at the end when all piping has been completed.

If an instrument has to be removed for maintenance, the fittings and pipes remain as they are. It is only necessary to close the valves – the instrument can then be removed, and refitted following maintenance.

Classification according to pressure equipment directive (PED 2014/68/EU):

For gases of fluid group 1 and liquids of fluid group 1; compliance with requirements of article 4, paragraph 3 (sound engineering practice).

New standard IEC 61518/DIN EN 61518

The flange connection between transmitter and valve manifold was modified in the new standard IEC 61518/DIN EN 61518. The only connection thread approved for use in the process flanges of the pressure transmitter is $^{7}/_{16}$-20 UNF.

The valve manifolds for M12 screws, including the accessory sets, have therefore been deleted.

Material acceptance test certificate to EN 10204-3.1

If a material acceptance test certificate to EN 10204-3.1 is required when ordering valve manifolds or shut-off fittings, please note that a single certificate is sufficient for each ordered item type. This means that you will only be charged for one certificate in the cost calculations.

Minimum/maximum operating temperatures

The maximum operating temperatures are given for each value or valve manifold.
The minimum operating temperatures depend on the material used for the valves or valve manifold.
They are as follows:

Material	Minimum operating temperature
Brass	-10 °C (-14 °F) according to EN 12516-4
Steel	-10 °C (-14 °F) according to AD200-W10
Stainless steel	-40 °C (-40 °F)

Pressure transmitters with shut-off fittings - mounting examples

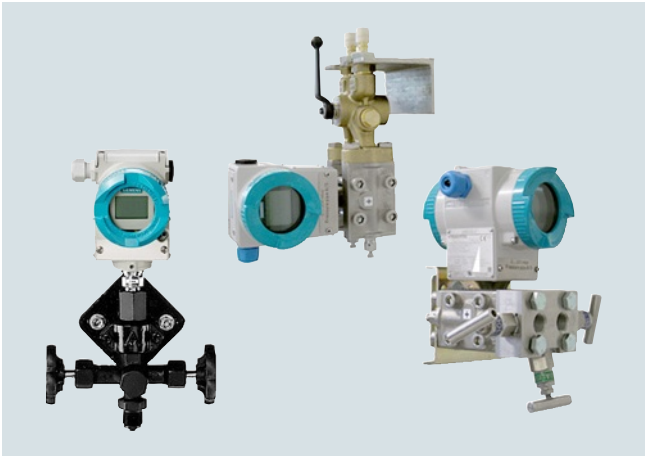

SITRANS P transmitter for gauge pressure with double shut-off valve, SITRANS P pressure transmitter with multiway cock or 3-spindle valve manifold

SITRANS P pressure transmitter for differential pressure, mounted in protective box (available on request)

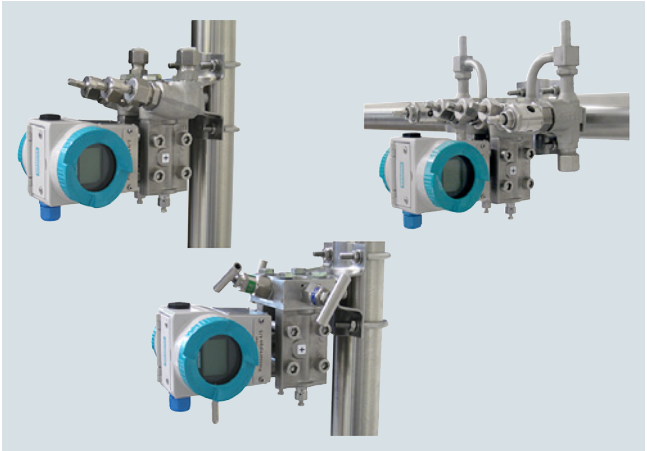

SITRANS P transmitter for differential pressure with 3-way valve manifold, 3-spindle valve manifold or valve manifold combination DN 5/DN 8

SITRANS P pressure transmitter mounted on valve combination "Mono-flange" for direct connection to flanges (available on request)

© Siemens AG 2018

Selection of available shut-off valves

Transmitters	Shut-off valves for general applications	Page		Shut-off valves for special applications	Page	
Relative and absolute pressure transmitters with process connection G½" male thread e.g. • SITRANS P200 7MF1565-... • SITRANS P210 7MF1566-... • SITRANS P220 7MF1567-... • SITRANS P300 7MF802.-...0.-.... • SITRANS P310 7MF2033-...0.-.... • SITRANS P DS III series 7MF403.-...0.-.... and 7MF423.-...0.-.... • SITRANS P410 7MF243.-...0.-.... C41	Shut-off valves/double shut-off valves to DIN 16270, DIN 16271 and DIN 16272	1/492	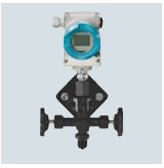	Double shut-off valve DN 5 for crossover ½-NPT-F to G½ nipple connection 7MF9011-4EA	1/495	
				2-spindle valve manifold DN 5 for installation in protective boxes 7MF9412-1B	1/513	
Gauge and absolute pressure transmitters with process connection ½"-14 NPT female or male thread e.g. • SITRANS P200 7MF1565-... • SITRANS P210 7MF1566-... • SITRANS P220 7MF1567-... • SITRANS P300 7MF802.-...1.-.... • SITRANS P310 7MF2033-...1.-.... • SITRANS P DS III series 7MF403.-...1.-.... and 7MF423.-...1.-.... • SITRANS P410 7MF243.-...1.-.... C41	Double shut-off valve DN 5 7MF9011-4EA, -4FA, -4GA and -4KA	1/495	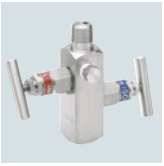 7MF9011-4FA 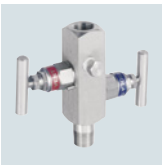 7MF9011-4KA	Double shut-off valve DN 5 for process connection ½-NPT 7MF9011-4HA	1/495	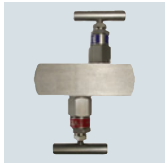
Absolute pressure transmitter with process connection to IEC 61518/DIN EN 61518 e.g. • SITRANS P DS III series 7MF433.-...	2-spindle valve manifold DN 5 7MF9411-5A.	1/498	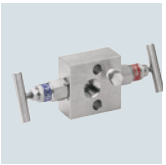	2-spindle valve manifold DN 5 for installation in protective boxes 7MF9412-1C.	1/513	

© Siemens AG 2018

Transmitters	Shut-off valves for general applications	Page		Shut-off valves for special applications	Page	
Differential pressure transmitter with process connection to IEC 61518/DIN EN 61518 e.g. SITRANS P310 7MF2433-... SITRANS P DS III series 7MF443.-... and 7MF453.-... SITRANS P410 7MF443.-... C41; 7MF453.-... C41 SITRANS P500 7MF54..-...	For 3/5-spindle valve manifold DN 5 7MF9411-5B. and 7MF9411-5C.	1/498	 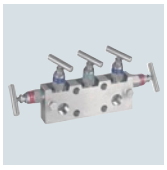	3-way valve manifolds, DN 5, forged version 7MF9410-1..	1/503	
				5-way valve manifolds, DN 5, forged version 7MF9410-3..	1/503	
	PN 100 multiway cocks 7MF9004-...	1/501	 	3-way valve manifolds, DN 8, forged version 7MF9416-1.. and 7MF9416-2..	1/506	
				Valve manifold combination DN 5/DN 8 for vapor measurement 7MF9416-6..	1/509	
				Valve manifold combination DN 8 for vapor measurement 7MF9416-4..	1/511	
				3- and 5-spindle valve manifolds for DN 5 for installation in protective boxes 7MF9412-1D. and 7MF9412-1E.	1/513	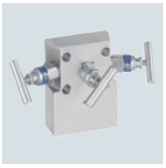
				3- and 5-spindle valve manifolds for vertical differential pressure lines 7MF9413-1..	1/517	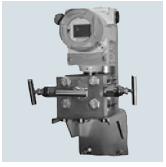
				Low-pressure multiway cock 7MF9004-4..	1/520	

© Siemens AG 2018

Shut-off valves to DIN 16270, DIN 16271 and DIN 16272

Overview

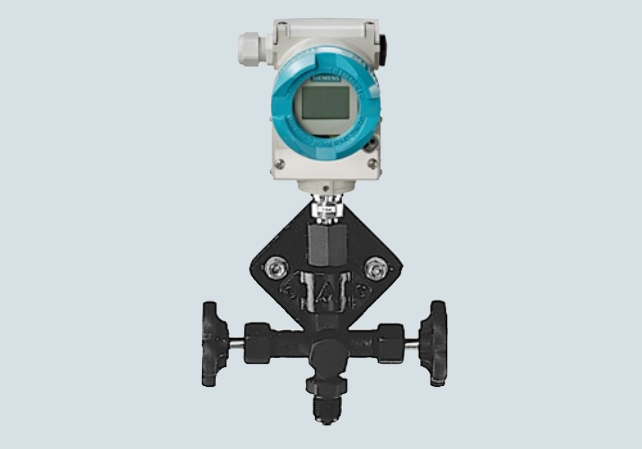

Transmitter for pressure with double shut-off valve 7MF9401-...

The shut-off valves for pressure gauges are used to shut off the line of the measured medium when dealing with aggressive and non-aggressive gases, vapors and liquids.

Design

A water trap must be connected upstream of the shut-off valve in the case of temperatures of the medium above 120 °C. The shut-off valves form B have a shaft with which they can be secured on an instrument bracket. An adapter is therefore not required to secure these valves. The vent/test connection can be shut off separately with the double shut-off valves DN 5. This permits checking of the zero on the pressure gauge. In addition, the characteristic of the pressure gauge can be checked using an external pressure source. The valve packing material is PTFE.

Selection and Ordering data		Article No.
Shut-off valves, form B, DIN 16270		
without test collar, connection shank, without certificate		
Material Valve housing	Maximum permissible working pressure	
CW614N (CuZn39Pb3) (mat. No. 2.0402)	250 bar (3626 psi)	**7MF9401-7AA**
P250GH (mat. No. 1.0460)	400 bar (5800 psi)	**7MF9401-7AB**
X 6 CrNiMoTi 17 12 2 (mat. No. 1.4571/316Ti)	400 bar (5800 psi)	**7MF9401-7AC**
Shut-off valves, form B, DIN 16271		
with test collar, connection shank, without certificate		
Material Valve housing	Maximum permissible working pressure	
CW614N (CuZn39Pb3) (mat. No. 2.0402)	250 bar (3626 psi)	**7MF9401-7BA**
P250GH (mat. No. 1.0460)	400 bar (5800 psi)	**7MF9401-7BB**
X 6 CrNiMoTi 17 12 2 (mat. No. 1.4571/316Ti)	400 bar (5800 psi)	**7MF9401-7BC**

Selection and Ordering data		Article No.
Shut-off valves, form B, DIN 16270		
without test collar, pipe union with ferrule 12 S DIN EN ISO 8434-1, without certificate		
Material Valve housing	Maximum permissible working pressure	
P250GH (mat. No. 1.0460)	400 bar (5800 psi)	**7MF9401-8AB**
X 6 CrNiMoTi 17 12 2 (mat. No. 1.4571/316Ti)	400 bar (5800 psi)	**7MF9401-8AC**
Shut-off valves, form B, DIN 16271		
with test collar, pipe union with ferrule 12 S DIN EN ISO 8434-1, without certificate		
Material Valve housing	Maximum permissible working pressure	
P250GH (mat. No. 1.0460)	400 bar (5800 psi)	**7MF9401-8BB**
X 6 CrNiMoTi 17 12 2 (mat. No. 1.4571/316Ti)	400 bar (5800 psi)	**7MF9401-8BC**
Double shut-off valves, form B, DIN 16272		
with test collar, connection shank, without certificate		
Material Valve housing	Maximum permissible working pressure	
CW614N (CuZn39Pb3) (mat. No. 2.0402)	250 bar (3626 psi)	**7MF9401-7DA**
P250GH (mat. No. 1.0460)	400 bar (5800 psi)	**7MF9401-7DB**
X 6 CrNiMoTi 17 12 2 (mat. No. 1.4571/316Ti)	400 bar (5800 psi)	**7MF9401-7DC**
Double shut-off valves, form B, DIN 16272		
with test collar, pipe union with ferrule 12 S DIN EN ISO 8434-1, without certificate		
Material Valve housing	Maximum permissible working pressure	
P250GH (mat. No. 1.0460)	400 bar (5800 psi)	**7MF9401-8DB**
X 6 CrNiMoTi 17 12 2 (mat. No. 1.4571/316Ti)	400 bar (5800 psi)	**7MF9401-8DC**
Accessories		
Factory test certificate EN 10204–2.2		**7MF9000-8AB**
Material acceptance test certificate EN 10204-3.1		**7MF9000-8AD**

Instrument bracket, see page 1/497.

© Siemens AG 2018

Characteristic curves

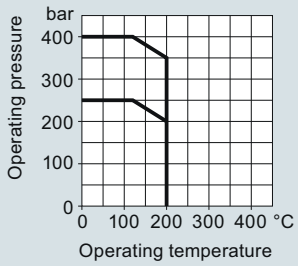

Steel or stainless steel version
400 bar (5800 psi) at 120 °C (248 °F)
350 bar (5076 psi) at 200 °C (392 °F)

Brass version
250 bar (3626 psi) at 120 °C (248 °F)
200 bar (2901 psi) at 200 °C (392 °F)

Permissible operating pressure as a function of the permissible operating temperature

Dimensional drawings

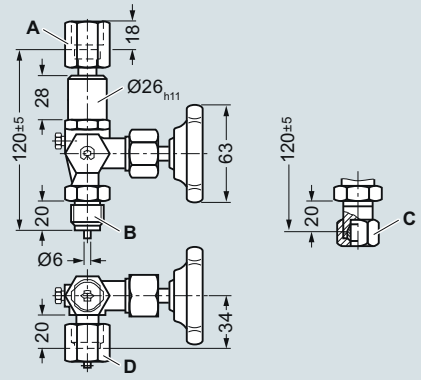

A Connection on device side: to DIN 16284, G½, SW 27
B Connection on measurement side: connection shank to DIN EN 837-1, G½
C Connection on measurement side: pipe union with ferrule 12 mm diameter, S series, to DIN EN ISO 8434-1
D Connection on test collar (with sealing cap): thread M20 x 1,5

Shut-off valve, form B, dimension drawing, dimensions in mm

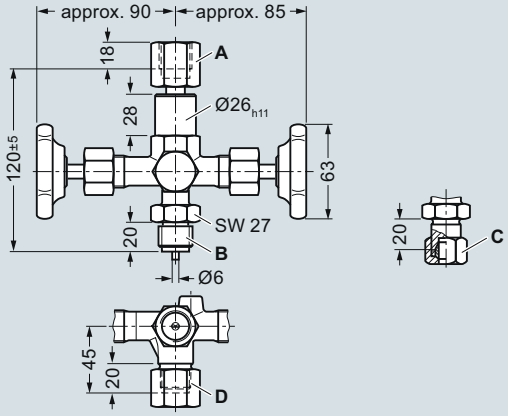

A Connection on device side: to DIN 16284, G½, SW 27
B Connection on measurement side: connection shank to DIN EN 837-1, G½
C Connection on measurement side: pipe union with ferrule 12 mm diameter, S series, to DIN EN ISO 8434-1
D Connection on test collar (with sealing cap): thread M20 x 1,5

Double shut-off valve, form B, dimension drawing, dimensions in mm

© Siemens AG 2018

Angle adapter

Overview

P300 pressure transmitter with shut-off valve and angle adapter

The angle adapter enables pressure transmitters with top displays to be read from the front.

Selection and Ordering data	Article No.
Angle adapters	**7MF9401-7WA**
Material: X 12 CrNiMoTi 17 12 2 (mat. No. 1.45714/316Ti), max. permissible operating pressure 400 bar (5800 psi)	
Accessories	
Factory test certificate EN 10204–2.2	**7MF9000-8AB**
Material acceptance test certificate EN 10204-3.1	**7MF9000-8AD**

Characteristic curves

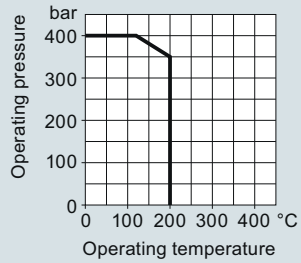

Stainless steel version
400 bar (5800 psi) at 120 °C (248 °F)
350 bar (5076 psi) at 200 °C (392 °F)

Permissible operating overpressure as a function of the permissible operating temperature

Dimensional drawings

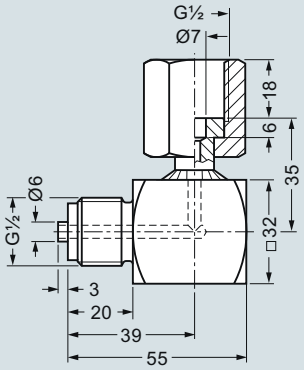

Angle adapter, dimensions in mm

© Siemens AG 2018

Overview

The double shut-off valves DN 5 are suitable for pressure gauges and pressure transmitters and available in 5 versions:

- Sleeve-nipple
- Sleeve-sleeve
- Sleeve-collar
- Collar-collar
- Collar-sleeve

The valve packing material is PTFE.

Characteristic curves

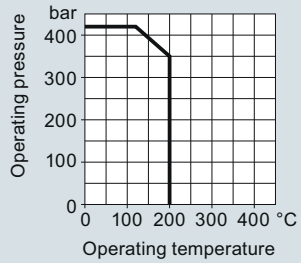

420 bar (6092 psi) at 120 °C (248 °F)
350 bar (5076 psi) at 200 °C (392 °F)

Permissible operating pressure as a function of the permissible operating temperature

Selection and Ordering data	Article No.
Shut-off valve DN 5	
Material: X 6 CrNiMoTi 17 13 2 (W.-Nr. 1.4404/316L), max. permissible operating overpressure 420 bar (6092 psi)	
• Sleeve-sleeve	**7MF9011-3HA**
Double shut-off valves DN 5	
Material: X 6 CrNiMoTi 17 13 2 (mat. No. 1.4404/316L), max. permissible working pressure 420 bar (6092 psi);	
• Sleeve-nipple connection	**7MF9011-4EA**
• Sleeve-sleeve	**7MF9011-4HA**
• Sleeve-collar	**7MF9011-4FA**
• Collar-collar	**7MF9011-4GA**
• Collar-sleeve	**7MF9011-4KA**
Accessories	
Factory test certificate EN 10204–2.2	**7MF9000-8AB**
Material acceptance test certificate EN 10204-3.1	**7MF9000-8AD**
Further designs	Order code
Add "**-Z**" to Article No. and specify Order code.	
Oil- and grease-free cleaning for oxygen applications, max. pressure PN 100 (1450 psi) and max. temperature 60 °C (140 °F)	**S12**
NACE MR-0175-certified	**D07**
incl. acceptance test certificate 3.1 to EN 10204	

Dimensional drawings

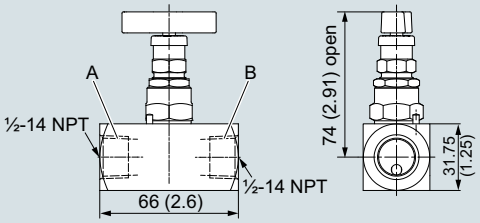

A Connection on device side: ½-14 NPT
B Connection on measurement side: ½-14 NPT

Shut-off valve DN 5 (sleeve-sleeve) 7MF9011-3HA, dimensions in mm (inch)

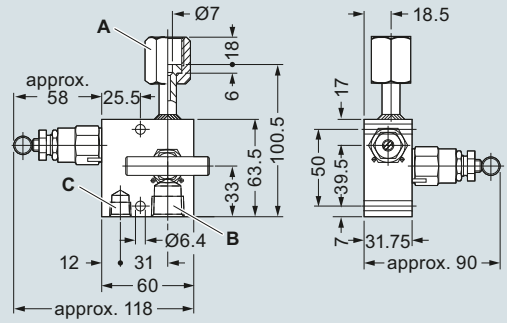

A Connection on device side: nipple to DIN 16284, G½, SW 27
B Connection on measurement side: ½-14 NPT
C Vent and test connection: ¼-18 NPT

Double shut-off valve DN 5 (sleeve-nipple) 7MF9011-4EA, dimensions in mm

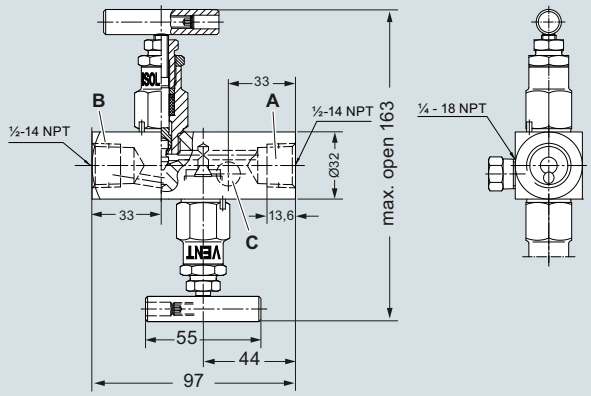

A Connection on device side : ½-14 NPT
B Connection on measurement side: ½-14 NPT
C Vent and test connection: ¼-18 NPT

Double shut-off valve DN 5 (sleeve-sleeve) 7MF9011-4HA, dimensions in mm

© Siemens AG 2018

Shut-off valves/Double shut-off valves

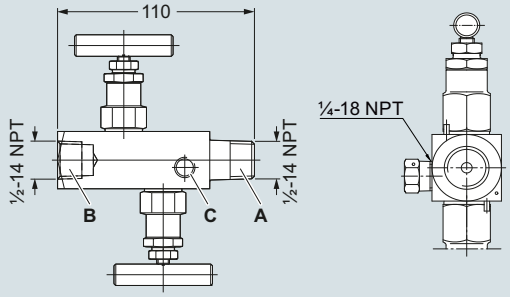

A Connection on device side : ½-14 NPT
B Connection on measurement side: ½-14 NPT
C Vent and test connection: ¼-18 NPT

Double shut-off valve DN 5 (sleeve-collar) 7MF9011-4FA, dimensions in mm

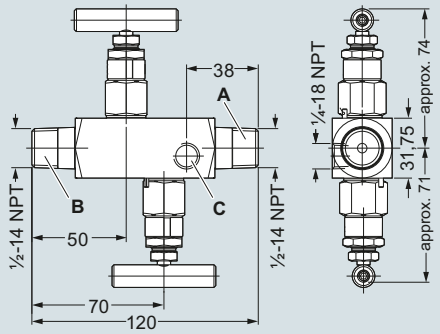

A Connection on device side : ½-14 NPT
B Connection on measurement side: ½-14 NPT
C Vent and test connection: ¼-18 NPT

Double shut-off valve DN 5 (collar-collar) 7MF9011-4GA, dimensions in mm

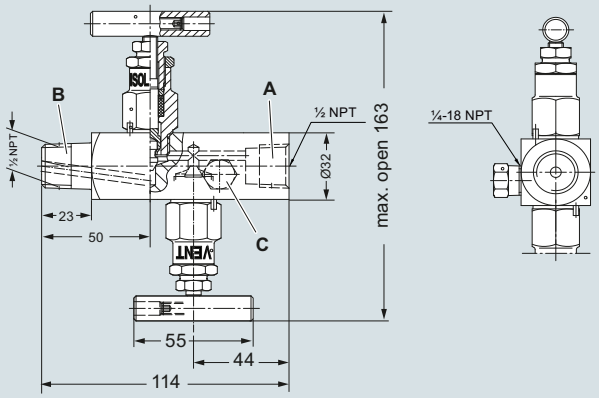

A Connection on device side : ½-14 NPT
B Connection on measurement side: ½-14 NPT
C Vent and test connection: ¼-18 NPT

Double shut-off valve DN 5 (collar-sleeve) 7MF9011-4KA, dimensions in mm

© Siemens AG 2018

Overview

The mounting set is suitable for the double shut-off valves 7MF9011-4.A and for wall, rack and pipe mounting.

Selection and Ordering data	Article No.
Mounting set for shut-off valves	
• 7MF9011-4DA and -4EA made of stainless steel, scope of delivery: 1x mounting bracket, 2x hexagon screws M6x40, 1x mounting clip, 2x washers 8.4 to DIN 125; 2x hexagon nuts 8.4 to DIN EN 24032	**7MF9011-8AB**
• 7MF9011-4FA, -4GA, 4HA, -4KA and -3HA made of stainless steel, scope of delivery: 1x mounting bracket, 2x hexagon screws M6x10, 1x mounting clip, 2x washers 8.4 to DIN 125; 2x hexagon nuts 8.4 to DIN EN 24032	**7MF9011-8AC**

Dimensional drawings

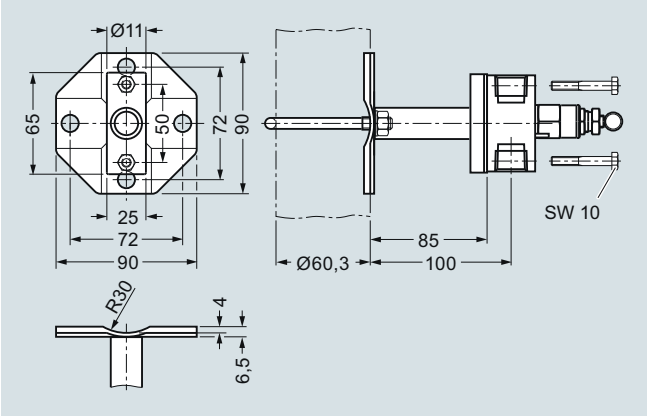

Mounting bracket (7MF9011-8AB) for shut-off valves 7MF9011-4DA and 7MF9011-4EA for wall, rack or pipe mounting, dimensions in mm

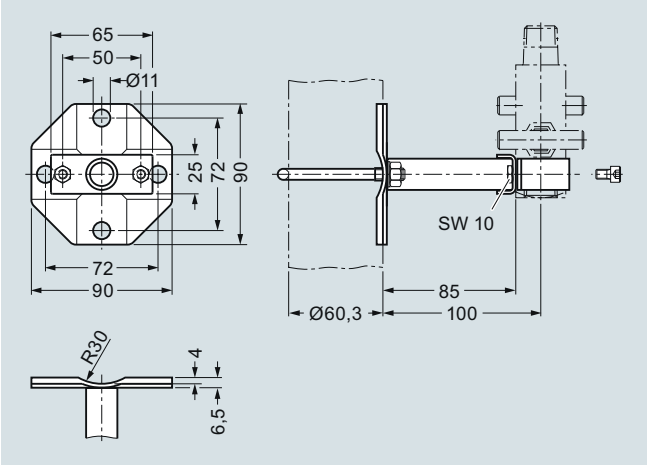

Mounting bracket (7MF9011-8AC) for shut-off valves 7MF9011-4FA and 7MF9011-4GA for wall, rack or pipe mounting, dimensions in mm

Overview

The instrument brackets are needed to mount the following units:

- Pressure gauges with threaded connection at the bottom
- Shut-off valves to DIN 16270, DIN 16271 and DIN 16272 (7MF9401-7.. and 7MF9401-8..)

Selection and Ordering data	Article No.
Instrument bracket, form H, DIN 16281 (e.g. for gauge) made of aluminium alloy, painted black, **for wall mounting**, screw-type bracket cover	
• Projection length 60 mm	**M56340-A0046**
• Projection length 100 mm	**M56340-A0047**
Instrument bracket, form A, DIN 16281 (e.g. for transmitter) made of annealed cast iron, galvanized and primed **for mounting on a wall** or rack or or on a sectional rail (horizontal/vertical); Screw-type bracket cover	**M56340-A0053**
Instrument bracket, form A, DIN 16281 (e.g. for transmitter) made of annealed cast iron, galvanized and primed with pipe clamp for **wall and pipe mounting** (horizotal/vertical) Screw-type bracket cover	**M56340-A0079**

Dimensional drawings

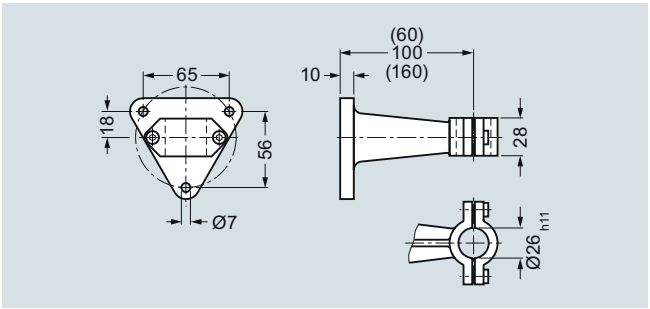

Instrument bracket form H, for wall mounting, M56340-A0046/-A0047, dimensions in mm

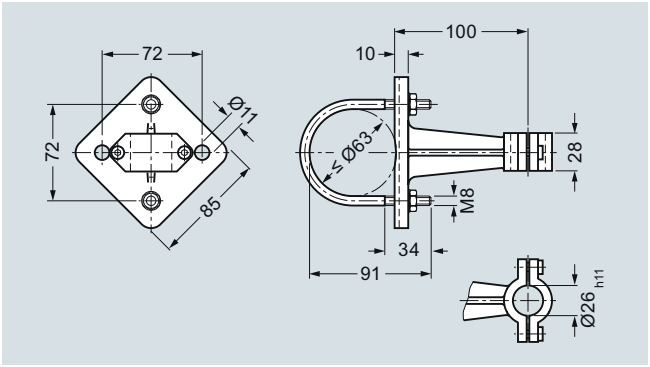

Instrument bracket form A, wall or pipe mounting, M56340-A0053/-A0079, dimensions in mm

© Siemens AG 2018

2-, 3- and 5-spindle valve manifolds DN 5

Overview

The 2-spindle, 3-spindle and 5-spindle valve manifolds 7MF9411-5.. are for pressure transmitters for absolute pressure or differential pressure.

The valve manifolds are used to shut off the differential pressure lines and to check the pressure transmitter zero.

The 2-spindle and the 5-spindle valve manifold enable in addition venting on the transmitter side and checking of the pressure transmitter characteristic.

Benefits

- Max. working pressure 420 bar (6092 psi)
- Each available in version for oxygen

Application

The spindle valve manifolds DN 5 are designed for liquids and gases.

Each is available in a version for oxygen on request.

Design

All versions of the valve manifolds have a process connection ½-14 NPT. The connection for the pressure transmitter is always designed as a flange connection to IEC 61518/DIN EN 61518, form B . The 2-spindle and the 5-spindle valve manifold have in addition a vent and test connection ¼-18 NPT.

The valves have an external spindle thread.

Materials used

Component	Material	Mat. No.
Housing	X 2 CrNiMo 17 13 2	1.4404/316L
Cones	X 6 CrNiMoTi 17 12 2	1.4571/316Ti
Spindles	X 2 CrNiMo 18 10	1.4404/316L
Head parts	X 5 CrNiMo 18 10	1.4401/316
Packings	PTFE	-

Function

Functions of all valve manifolds:

- Shutting off the differential pressure lines
- Checking the pressure transmitter zero

Additional functions of the 2-spindle and 5-spindle valve manifolds through the vent and test connection:

- Venting on the transmitter side
- Checking the pressure transmitter characteristic

Selection and Ordering data

Selection and Ordering data	Article No.
Valve manifolds DN 5 ↗	**7MF9411 - ■■A**
↗ Click on the Article No. for the online configuration in the PIA Life Cycle Portal.	
for liquids and gases, for flanging to pressure transmitters for absolute and differential pressure, max. working pressure 420 bar (order accessory set with Order code), without certificate	
• 2-spindle valve manifold	**5A**
• 3-spindle valve manifold	**5B**
• 5-spindle valve manifold	**5C**
Accessories	
Factory test certificate EN 10204–2.2	**7MF9000-8AB**
Material acceptance test certificate EN 10204-3.1	**7MF9000-8AD**

Selection and Ordering data	Order code	Article No.
Further designs[1]		
Please add "**-Z**" to Article No. and specify Order code.		
Accessory set to EN (connection between valve manifold and pressure transmitter)		
for valve manifold 7MF9411-5A.		
2x screws $^{7}/_{16}$-20 UNF x 1¾ inch to ASME B18.2.1; chromized steel 1x gasket made of PTFE, max. permissible 420 bar (6092 psi), 80 °C (176 °F)	**K35**	**7MF9411-7DB**
2x screws $^{7}/_{16}$-20 UNF x 1¾ inch to ASME B18.2.1; **stainless steel** 1x gasket made of PTFE, max. permissible 420 bar (6092 psi), 80 °C (176 °F)	**K45**	**7MF9411-7DC**
for valve manifold 7MF9411-5B. and -5C.		
4x screws $^{7}/_{16}$-20 UNF x 1¾ inch to ASME B18.2.1; chromized steel 2x flat gaskets made of PTFE, max. permissible 420 bar (6092 psi), 80 °C (176 °F)	**K36**	**7MF9411-5DB**
4x screws $^{7}/_{16}$-20 UNF x 1¾ inch to ASME B18.2.1; **stainless steel** 2x flat gaskets made of PTFE, max. permissible 420 bar (6092 psi), 80 °C (176 °F)	**K46**	**7MF9411-5DC**
Accessory set to DIN[2] (connection between valve manifold and pressure transmitter)		
for valve manifold 7MF9411-5A.		
2x screws M10x45 to DIN EN 24014; chromized steel 2x washers Ø 10.5 mm to DIN 125; 1x gasket made of PTFE, max. permissible 420 bar (6092 psi), 80 °C (176 °F)	**K15**	**7MF9411-7BB**
2x screws M10x45 to DIN EN 24014; **stainless steel** 2x washers Ø 10.5 mm to DIN 125, **stainless steel**; 1x gasket made of PTFE, max. permissible 420 bar (6092 psi), 80 °C (176 °F)	**K25**	**7MF9411-7BC**

© Siemens AG 2018

Selection and Ordering data	Order code	Article No.
***Further designs*[1)]**		
Please add "**-Z**" to Article No. and specify Order code.		
for valve manifolds 7MF9411-5B. and -5C.		
4x screws M10x45 to DIN EN 24014; chromized steel 4x washers Ø 10.5 mm to DIN 125; 2x flat gaskets made of PTFE, max. permissible 420 bar (6092 psi), 80 °C (176 °F) Flange connection with M10 screws only permissible up to PN 160.	**K16**	**7MF9411-6BB**
4x screws M10x45 to DIN EN 24014; **stainless steel** 4x washers Ø 10.5 mm to DIN 125, **stainless steel**; 2x flat gaskets made of PTFE, max. permissible 420 bar (6092 psi), 80 °C (176 °F) Flange connection with M10 screws only permissible up to PN 160.	**K26**	**7MF9411-6BC**
Mounting plate		
• for valve manifold, made of electrogalvanized sheet-steel		
- **for wall mounting** or for securing on rack (72 mm grid), weight 0.5 kg Scope of delivery: 1 mounting plate with bolts for mounting on valve manifold	**M11**	**7MF9006-6EA**
- **for pipe mounting,** weight 0.7 kg Scope of delivery: 1x mounting plate M11, 2x pipe brackets with nuts and washers (for pipe with max. Ø 60.3 mm) and fastening screws for mounting on valve manifold	**M12**	**7MF9006-6GA**
• for valve manifold, made of **stainless steel 316L**		
- **for wall mounting** or for securing on rack (72 mm grid), weight 0.5 kg Scope of delivery: 1 mounting plate with bolts for mounting on valve manifold	**M21**	**7MF9006-6EC**
- **for pipe mounting,** weight 0.7 kg Scope of delivery: 1x mounting plate M21, 2x pipe brackets with nuts and washers (for pipe with max. Ø 60.3 mm)	**M22**	**7MF9006-6GC**
Valve manifold 100 bar		
Oil- and grease-free cleaning for oxygen applications, max. pressure PN 100 (1450 psi) and max. temperature 60 °C (140 °F)		
• for 7MF9411-5A.	**S12**	
• for 7MF9411-5B.	**S13**	
• for 7MF9411-5C.	**S14**	
NACE MR-0175-certified incl. acceptance test certificate 3.1 to EN 10204	**D07**	

1) When ordering accessory set or mounting together with the valve manifolds, please use Order code; otherwise use Article No.
2) Flange connections to DIN 19213 only permissible up to PN 160 (2321 psi)!

Accessories

Accessory set for 2-, 3- and 5-spindle valve manifolds

2-spindle valve manifold DN 5

- K35: 2 screws $^{7}/_{16}$-20 UNF x 1¾ inch to ASME B18.2.1, 1 flat gasket
- K15: 2 screws M10x45 to DIN EN 24014, 2 washers, 1 flat gasket

3-spindle and 5-way valve manifold DN 5

- K36: 4 screws $^{7}/_{16}$-20 UNF x 1¾ inch to ASME B18.2.1, 2 flat gaskets
- K16: 4 screws M10x45 to DIN EN 24014, 4 washers, 2 flat gaskets

Washers Ø 10.5 to DIN 125

Flat gaskets made of PTFE, max. 420 bar (6092 psi), 80 °C (176 °F)

Note: Flange connection with M10 screws only permissible up to PN 160!

Mounting plate

Made of electrogalvanized sheet-steel

- M11: For wall mounting or for securing on rack (72 mm grid)
  Scope of delivery:
  - 1 mounting plate with bolts for mounting on valve manifold
- M12: For pipe mounting
  Scope of delivery:
  - 1 mounting plate M11
  - 2 pipe brackets with nuts and washers for pipes with max. Ø 60.3 mm

Valve manifold 100 bar, suitable for oxygen

- S12: For 2-way valve manifold
- S13: For 3-way valve manifold
- S14: For 5-way valve manifold

Characteristic curves

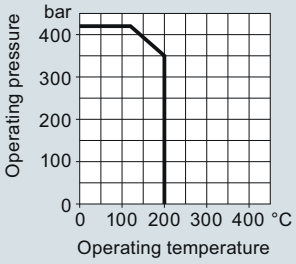

Valve manifolds PN 5 (7MF9411-5..), permissible working pressure as a function of the permissible working temperature

© Siemens AG 2018

2-, 3- and 5-spindle valve manifolds DN 5

Dimensional drawings

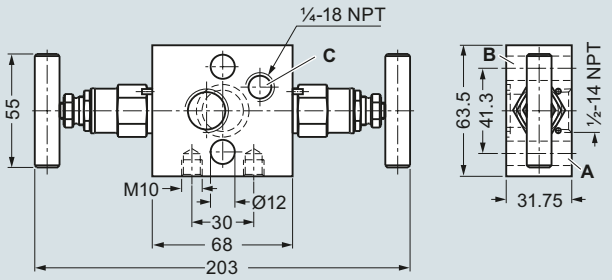

A Process connection: ½-14 NPT
B Transmitter connection: Flange connection to IEC 61518, form B
C Vent / test connection: ¼-18 NPT
Valve design: external spindle thread

2-spindle valve manifold DN 5 (7MF9411-5A.), dimensions in mm

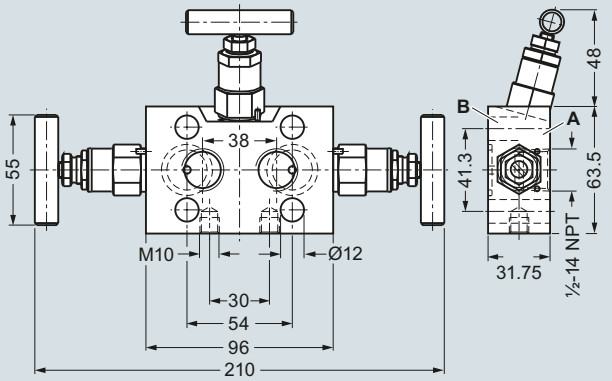

A Process connection: ½-14 NPT
B Transmitter connection: Flange connection to IEC 61518, form B
Valve design: external spindle thread

3-spindle valve manifold DN 5 (7MF9411-5B.), dimensions in mm

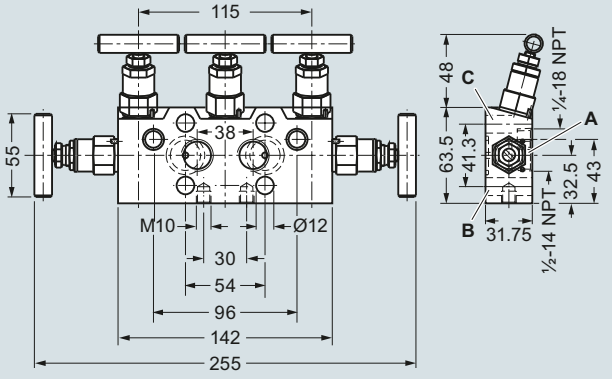

A Process connection: ½-14 NPT
B Transmitter connection: Flange connection to IEC 61518, form B
C Vent / test connection: ¼-18 NPT
Valve design: external spindle thread

5-spindle valve manifold DN 5 (7MF9411-5C.), dimensions in mm

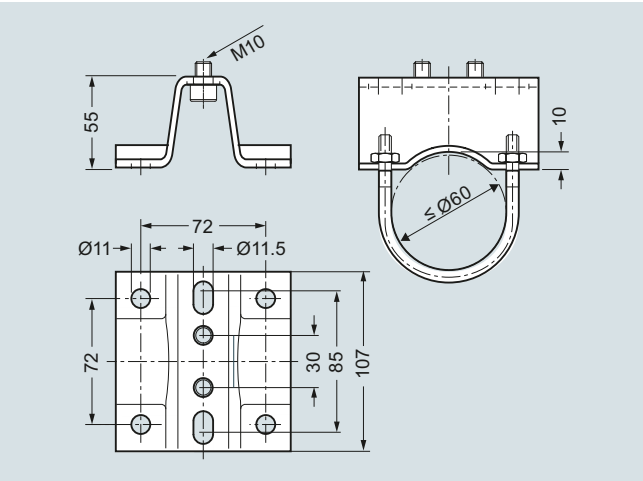

Mounting plate 7MF9006-6.. (M11, M12) for valve manifold, dimensions in mm

Schematics

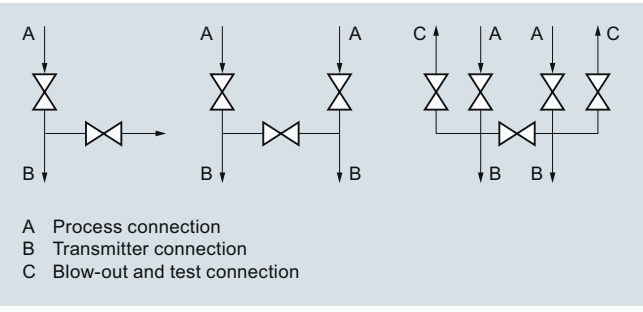

A Process connection
B Transmitter connection
C Blow-out and test connection

2-spindle, 3-spindle and 5-spindle valve manifold DN 5, connections

© Siemens AG 2018

Overview

Multiway cock PN 100 (1450 psi) (7MF9004-1P.) for differential pressure transmitters

The multiway cock PN 100 (1450 psi) can be flanged to pressure transmitters for differential pressure.

Benefits

- Version available for aggressive liquids, gases and vapors
- Robust design
- Oil-free and grease-free version possible
- One-hand operation

Application

The PN 100 (1450 psi) multiway cock is available in versions for aggressive and non-aggressive liquids, gases and vapors.

Design

The multiway cock can be flanged with four screws to pressure transmitters for differential pressure.

The PN 100 (1450 psi) has 2 process connections and one blow-out connection. A steel version of the multiway cock is available for non-aggressive media, and a stainless steel version for aggressive media. The housing is forged in one piece. The switching lever is removable.

Sealing can be improved during operation.

Note: An accessory set is always required for flanging of the multiway cock to a differential pressure transmitter.

Function

- Shutting off the differential pressure lines
- Blowing out the differential pressure lines
- Testing the pressure transmitter zero

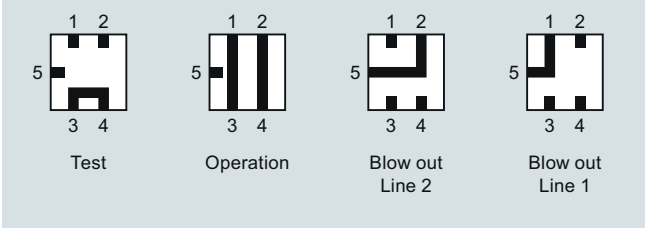

Cock positions; the symbols are printed on the cock

Technical specifications

Multiway cocks PN 100		
Measured medium	**Water, non-aggressive liquids and gases**	**Aggressive liquids, gases and vapors**
Material	P250GH, mat. No.: 1.0460	X 6 CrNiMoTi 17 12 2, mat. No. 1.4571/316Ti
Connections	Steel, for pipe Ø 12 mm, L series	Stainless steel, for pipe Ø 12 mm, L series
• Process connection • Connection for blowing out	2 bulkhead glands Pipe union with ferrule	
Max. permissible working temperature	200 °C (392 °F)	
Max. permissible working pressure	100 bar (1450 psi) (up to max. 60 °C (140 °F))	
Weight	2.5 kg	

Selection and Ordering data	Article No.
Multiway cock PN 100 (1450 psi) ↗	**7MF9004-■■A**
↗ Click on the Article No. for the online configuration in the PIA Life Cycle Portal.	
for flanging to pressure transmitters, weight 2.5 kg (without accessory set), without certificate	
For water and non-aggressive gases and vapors	**1P**
For aggressive liquids, gases and vapors	**1Q**
Accessories	
Factory test certificate EN 10204–2.2	**7MF9000-8AB**
Material acceptance test certificate EN 10204-3.1	**7MF9000-8AD**

Selection and Ordering data	Order code	Article No.
Further designs[1] Please add "**-Z**" to Article No. and specify Order code.		
Accessory set to EN (required for flanging, weight 0.2 kg) 4x screws $^{7}/_{16}$-20 UNF x 1 inch to ASME B18.2.1; chromized steel 2x gaskets made of PTFE, max. permissible temperature 80 °C (176 °F)	**L31**	**7MF9004-5CC**
Accessory set to DIN (required for flanging, weight 0.2 kg) 4x screws M10x25 to DIN EN 24017; chromized steel, 4x washers Ø 10.5 mm to DIN 125; 2x gaskets made of PTFE, max. permissible temperature 80 °C (176 °F)		
• Standard design • Version for oxygen (together with Order code S11	**L11** **L15**	**7MF9004-6AD** **7MF9004-6AE**
Multiway cock in oil-free and grease-free design Oil- and grease-free cleaning for oxygen applications, max. pressure PN 100 (1450 psi) and max. temperature 60 °C (140 °F), BAM-tested lubricant, gasket suitable for oxygen measurement (only with Article No. 7MF9004–1Q.Z)	**S11**	
Mounting bracket Required **for wall mounting** or for securing on rack (72 mm grid), made of electrogalvanized sheet-steel, weight 0.85 kg	**M13**	**7MF9004-6AA**
NACE MR-0175-certified incl. acceptance test certificate 3.1 to EN 10204 (only available for version 7MF9004-1QA)	**D07**	

[1] When ordering accessory set or mounting together with the multiway cock, please use Order code; otherwise use Article No.

© Siemens AG 2018

Multiway cocks PN 100

Accessories

Accessory set for multiway cock PN 100

- L31: 4 screws $^{7}/_{16}$-20 UNF x 1 inch, 2 flat gaskets
- L11: 4 screws M10x25 to DIN EN 24017, 4 washers, 2 flat gaskets
- L15 (suitable for oxygen): 4 screws M10x25 to DIN EN 24017, 4 washers, 2 flat gaskets

Washers Ø 10.5 to DIN 125

Flat gaskets made of PTFE, max. permissible temperature 80 °C (176 °F)

Multiway cock in oil-free and grease-free design

- S11 (only for aggressive liquids, gases and vapors (7MF9004-1Q.)): Max. PN 63 (914 psi) (instead of PN 100 (1450 psi)), BAM-tested lubricant, gasket suitable for oxygen

Mounting brackets

- M13: Required for wall mounting or for securing on rack (72 mm grid); made of electrogalvanized sheet-steel

Characteristic curves

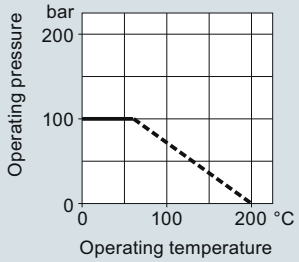

Multiway cock PN 100 (1450 psi), permissible operating pressure as a function of the permissible operating temperature

Dimensional drawings

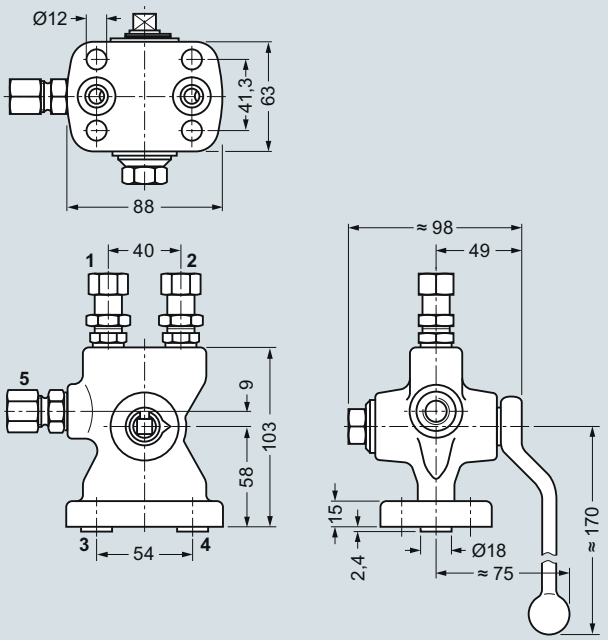

1 and 2 Process connections
3 and 4 Connections for transmitter (DIN EN 61518, form A)
5 Connections for blowing out

Multiway cock 7MF9004-1P. for flanging to pressure transmitters for differential pressure, dimensions in mm

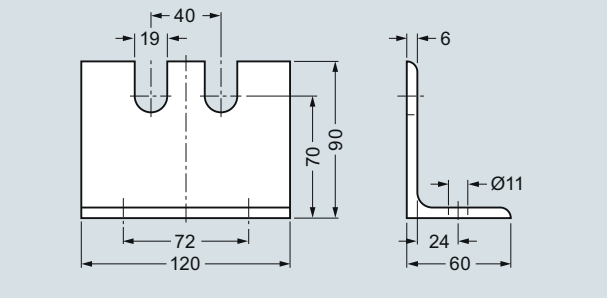

Mounting bracket 7MF9004-6AA (M13), dimensions in mm

© Siemens AG 2018

Overview

The three-spindle and five-spindle valve manifolds DN 5 (7MF9410-1../-3..) are used to shut off the differential pressure lines and to check the transmitter zero.

In addition, the five-way valve manifold permits blowing out of the differential pressure lines.

Benefits

- Available for aggressive and non-aggressive liquids and gases
- Max. working pressure 420 bar (6092 psi), with version for oxygen max. 100 bar (1450 psi)

Application

The 3-way and 5-way valve manifolds are available in versions for aggressive and non-aggressive liquids and gases.

Mounting plates are available for wall mounting, for securing to mounti ng racks or for pipe mounting.

Design

The process connection of the 3-way and 5-way valve manifolds is a pipe union with ferrule.

Both valve manifolds have 2 flange connections for connecting a pressure transmitter.

In addition, the five-way valve manifold has 2 blow-out connections.

Depending on the version the valve manifold has either 3 or 5 valves, each with an internal spindle thread.

Materials used

	For non-aggressive liquids and gases		For aggressive liquids and gases	
Component	**Material**	**Mat. No.**	**Material**	**Mat. No.**
Housing	P250GH	1.0460	X 6 CrN-iMoTi17 12 2	1.4571/ 316Ti
Head parts	C 35	1.0501		
Spindles	X 12 CrMoS 17	1.4104		
Cones	X 35 CrMo 17 hardened and tempered	1.4122		
Valve seats	X 6 CrNiMoTi 17 12 2	1.4571/ 316Ti		
Packings	PTFE	-	PTFE	-

Function

- Shutting off the differential pressure lines
- Checking the pressure transmitter zero
- In addition, the five-way valve manifold permits blowing out of the differential pressure lines.

Selection and Ordering data	Article No.
3-way valve manifold DN 5 ↗	**7MF9410-■■A**
↗ Click on the Article No. for the online configuration in the PIA Life Cycle Portal.	
For flanging to pressure transmitters for differential pressure, process connection: Pipe union with ferrule, max. working pressure 420 bar (6092 psi), weight 2.9 kg (order accessory set and mounting plate with Order code), without certificate	
• for non-aggressive liquids and gases	**1E**
• for aggressive liquids and gases	**1F**
5-way valve manifold DN 5	
↗ Click on the Article No. for the online configuration in the PIA Life Cycle Portal.	
For flanging to pressure transmitters for differential pressure, process connection: Pipe union with ferrule, max. working pressure 420 bar (6092 psi), weight 4.4 kg (order accessory set and mounting plate with Order code), without certificate	
• for non-aggressive liquids and gases	**3E**
• for aggressive liquids and gases	**3F**
Accessories	
Factory test certificate EN 10204–2.2	**7MF9000-8AB**
Material acceptance test certificate EN 10204-3.1	**7MF9000-8AD**

© Siemens AG 2018

3-way and 5-way valve manifolds DN 5

Selection and Ordering data	Order code	Article No.
Further designs[1)]		
Please add "**-Z**" to Article No. and specify Order code.		
Accessory set to EN		
(required for flanging, weight 0.2 kg)		
4x screws $^{7}/_{16}$-20 UNF x $2^{1}/_{8}$ inch to ASME B18.2; chromized steel 2x flat gaskets made of PTFE, max. permissible 420 bar (6092 psi), 80 °C (176 °F)	**B31**	**7MF9010-5CC**
4x screws $^{7}/_{16}$-20 UNF x $2^{1}/_{8}$ inch to ASME B18.2; chromized steel 2x O-rings to DIN 3771, 20 x 2.65 - S - FPM90, max. permissble 420 bar (6092 psi), 120 °C (248 °F)	**B34**	**7MF9410-5CA**
Accessory set to DIN[2)]		
(required for flanging, weight 0.2 kg)		
4x screws M10x55 to DIN EN 24014; chromized steel 4x washers Ø 10.5 mm to DIN 125; 2x flat gaskets made of PTFE, max. permissible 420 bar (6092 psi), 80 °C (176 °F)		
• Standard design	**B11**	**7MF9010-6AD**
• Version for oxygen	**B15**	**7MF9010-6AE**
4x screws M10x55 to DIN EN 24014; chromized steel 4x washers Ø 10.5 mm to DIN 125; 2x O-rings to DIN 3771, 20 x 2.65 - S - FPM90, max. permissble 420 bar (6092 psi), 120 °C (248 °F)	**B16**	**7MF9010-6CC**
Mounting plate		
for valve manifold, made of electrogalvanized sheet-steel		
for wall mounting or for securing on rack (72 mm grid), weight 0.5 kg Scope of delivery: 1 mounting plate with bolts for mounting on valve manifold	**M11**	**7MF9006-6EA**
for pipe mounting, weight 0.7 kg Scope of delivery: 1x mounting plate M11, 2x pipe brackets with nuts and washers (for pipe with max. Ø 60.3 mm)	**M12**	**7MF9006-6GA**
Valve manifold 100 bar		
suitable for oxygen		
for 7MF9410-1F	**S13**	
for 7MF9410-3F	**S14**	
NACE MR-0175-certified	**D07**	
incl. acceptance test certificate 3.1 to EN 10204 (only available for version 7MF9410-1FA and -3FA)		

1) When ordering accessory set or mounting together with the valve manifolds, please use Order code; otherwise use Article No.
2) Flange connections to DIN 19213 only permissible up to PN 160 (2321 psi)

Accessories

Accessory set for 3-way and 5-way valve manifold DN 5 for flanging

- B31: 4 screws $^{7}/_{16}$-20 UNF x $2^{1}/_{8}$ inch to ASME B18.2.1, 2 flat gaskets
- B34: 4 screws $^{7}/_{16}$-20 UNF x $2^{1}/_{8}$ inch to ASME B18.2.1, 2 O-rings (FPM 90)
- B11: 4 screws M10x55 to DIN EN 24014, 4 washers, 2 flat gaskets
- B15 (suitable for oxygen): 4 screws M10x55 to DIN EN 24014, 4 washers, 2 flat gaskets
- B16: 4 screws M10x55 to DIN EN 24014, 4 washers, 2 O-rings (FPM 90)

Washers Ø 10.5 to DIN 125

Flat gaskets made of PTFE, max. 420 bar (6092 psi), 80 °C (176 °F)

O-ring to DIN 3771, 20 x 2.65 – S – FPM90, max. 420 bar (6092 psi), 120 °C (248 °F)

Note: M10 screws only permissible up to PN 160 (2320 psi)!

Mounting plate

Made of electrogalvanized sheet-steel

- M11: For wall mounting or for securing on rack (72 mm grid)
  Scope of delivery:
  - 1 mounting plate 7MF9006-6EA with bolts for mounting on valve manifold
- M12: For pipe mounting
  Scope of delivery:
  - 1 mounting plate M11
  - 2 pipe brackets with nuts and washers for pipes with max. Ø 60.3 mm

Valve manifold 100 bar, suitable for oxygen

S12: Only in combination with versions for aggressive liquids and gases

© Siemens AG 2018

Characteristic curves

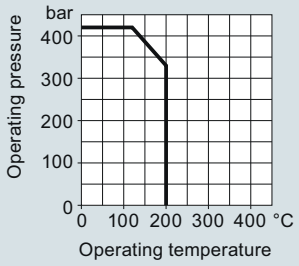

Permissible operating pressure as a function of the permissible operating temperature

Dimensional drawings

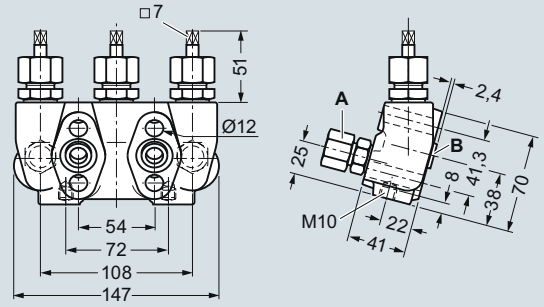

A Process connection (e.g. on primary device): Pipe union with ferrule, diameter 12 mm, S series to DIN 2353
B Transmitter connection: Flange connection to EN 61518, form A
Valve design: internal spindle thread

3-way valve manifold DN 5 (7MF9410-1..), dimensions in mm

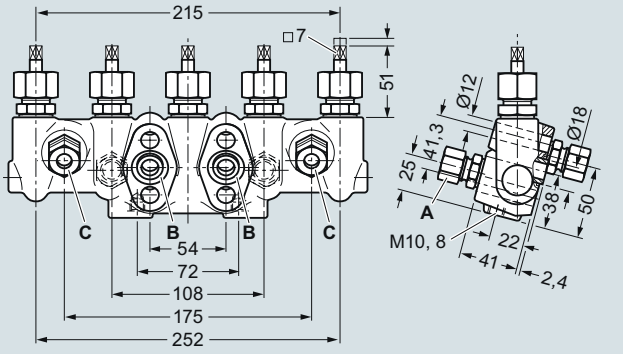

A Process connection (e.g. on primary device): Pipe union with ferrule, diameter 12 mm, S series to DIN 2353
B Transmitter connection: Flange connection to EN 61518, form A
C Blow-out connection: Pipe union with ferrule, diameter 12 mm, S series to DIN 2353
Valve design: internal spindle thread

5-way valve manifold DN 5 (7MF9410-3..), dimensions in mm

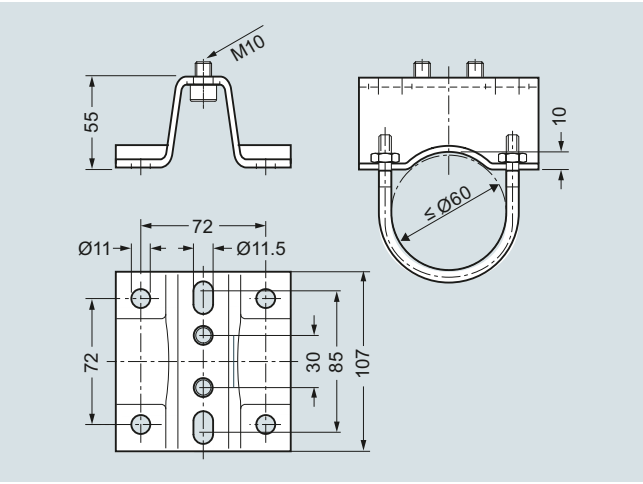

Mounting plate 7MF9006-6.. (M11, M12) for valve manifold, dimensions in mm

Schematics

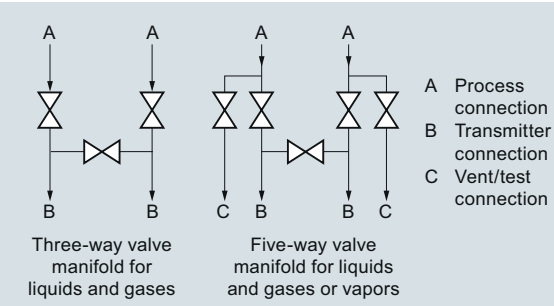

3-way and 5-way valve manifolds, connections

© Siemens AG 2018

3-way valve manifold DN 8

Overview

The 3-way valve manifold DN 8 (7MF9416-1../-2..) is for pressure transmitters for differential pressure. It is used to shut off and blow out differential pressure lines and to test the pressure transmitter zero.

In the designs with a test connection, a test device can be connected to test the pressure transmitter characteristic.

Benefits

- For aggressive and non-aggressive liquids and gases
- The maximum working pressure is 420 bar (6092 psi).

Application

The 3-way valve manifold is available in versions for aggressive and non-aggressive liquids and gases.

Mounting plates are available for wall mounting, for securing to mounting racks or for pipe mounting.

Design

For the process connection on the version for non-aggressive media it is possible to choose between a pipe union with ferrule and welding pins.

The version for aggressive media always has a pipe union with ferrule.

Both versions are available optionally with a test connection M20x1.5.

The valves have an internal spindle thread.

Materials used

	For non-aggressive liquids and gases		**For aggressive liquids and gases**	
Component	Material	Mat. No.	Material	Mat. No.
Housing	P250GH	1.0460	X 6 CrNiMoTi17 12 2	1.4571/ 316Ti
Head parts	C 35	1.0501		
Spindles	X 12 CrMoS 17	1.4104		
Cones	X 35 CrMo 17 hardened and tempered	1.4122		
Valve seats	X 6 CrNiMoTi 17 12 2	1.4571/316Ti		
Packings	PTFE	-	PTFE	-

Function

The 3-way valve manifold DN 8 performs two functions as standard:

- Shutting off the differential pressure lines
- Checking the pressure transmitter zero

All versions are also available with a test connection, to which a test device for checking the pressure transmitter characteristic can be connected.

Selection and Ordering data	Article No.
3-way valve manifold DN 8 ↗	**7MF9416-■■A**
↗ Click on the Article No. for the online configuration in the PIA Life Cycle Portal.	
For flanging to pressure transmitters for differential pressure, max. working pressure 420 bar (6092 psi), (order accessory set and mounting plate with Order code), without certificate	
For non-aggressive liquids and gases procedss connection: Pipe union with ferrule Ø 12 mm	
• without test connection	**1B**
• with test connection	**1C**
For non-aggressive liquids and gases procedss connection: Welding pin Ø 14 x 2.5	
• without test connection	**2C**
• with test connection	**2D**
For aggressive liquids and gases process connection: Pipe union with ferrule Ø 12 mm	
• without test connection	**1D**
• with test connection	**1E**
Accessories	
Factory test certificate EN 10204–2.2	**7MF9000-8AB**
Material acceptance test certificate EN 10204-3.1	**7MF9000-8AD**

© Siemens AG 2018

Selection and Ordering data	Order code	Article No.
Further designs[1]		
Please add "**-Z**" to Article No. and specify Order code.		
Accessory set to EN (required for flanging, weight 0.2 kg)		
4x screws $^{7}/_{16}$-20 UNF x $2^{1}/_{8}$ inch to ASME B18.2; chromized steel 2x flat gaskets made of PTFE, max. permissible 420 bar (6092 psi), 80 °C (176 °F)	**B31**	**7MF9010-5CC**
4x screws $^{7}/_{16}$-20 UNF x $2^{1}/_{8}$ inch to ASME B18.2; chromized steel 2x O-rings to DIN 3771, 20 x 2.65 - S - FPM90, max. permissble 420 bar (6092 psi), 120 °C (248 °F)	**B34**	**7MF9410-5CA**
Accessory set to DIN[2] (required for flanging, weight 0.2 kg)		
4x screws M10x55 to DIN EN 24014; chromized steel 4x washers Ø 10.5 mm to DIN 125; 2x flat gaskets made of PTFE, max. permissible 420 bar (6092 psi), 80 °C (176 °F)	**B11**	**7MF9010-6AD**
4x screws M10x55 to DIN EN 24014; chromized steel 4x washers Ø 10.5 mm to DIN 125; 2x O-rings to DIN 3771, 20 x 2.65 - S - FPM90, max. permissble 420 bar (6092 psi), 120 °C (248 °F)	**B16**	**7MF9010-6CC**
Mounting plate For valve manifold, made of electrogalvanized sheet-steel		
for wall mounting or for securing on rack (72 mm grid), weight 0.5 kg Scope of delivery: 1 mounting plate with bolts for mounting on valve manifold	**M11**	**7MF9006-6EA**
for pipe mounting, weight 0.7 kg Scope of delivery: 1x mounting plate M11, 2x pipe brackets with nuts and washers (for pipe with max. Ø 60.3 mm)	**M12**	**7MF9006-6GA**
NACE MR-0175-certified incl. acceptance test certificate 3.1 to EN 10204 (only available for version 7MF9416-1DA and -1EA)	**D07**	

1) When ordering accessory set or mounting together with the valve manifold, please use Order code; otherwise use Article No.
2) Flange connections to DIN 19213 only permissible up to PN 160 (2321 psi)!

Accessories

Accessory set for 3-way valve manifold DN 8 for flanging

- B31: 4 screws $^{7}/_{16}$-20 UNF x $2^{1}/_{8}$ inch to ASME B18.2.1, 2 flat gaskets
- B34: 4 screws $^{7}/_{16}$-20 UNF x $2^{1}/_{8}$ inch to ASME B18.2.1, 2 O-rings (FPM 90)
- B11: 4 screws M10x55 to DIN EN 24014, 4 washers, 2 flat gaskets
- B16: 4 screws M10x55 to DIN EN 24014, 4 washers, 2 O-rings (FPM 90)

Washers Ø 10.5 to DIN 125

Flat gaskets made of PTFE, max. 420 bar (6092 psi), 80 °C (176 °F)

O-ring to DIN 3771, 20 x 2.65 – S – FPM90, max. 420 bar (6092 psi), 120 °C (248 °F)

Note: M10 screws only permissible up to PN 160 (2320 psi)!

Mounting plate

Made of electrogalvanized sheet-steel

- M11: For wall mounting or for securing on rack (72 mm grid)
  Scope of delivery:
  - 1 mounting plate with bolts for mounting on valve manifold
- M12: For pipe mounting
  Scope of delivery:
  - 1 mounting plate M11
  - 2 pipe brackets with nuts and washers for pipes with max. Ø 60.3 mm

Characteristic curves

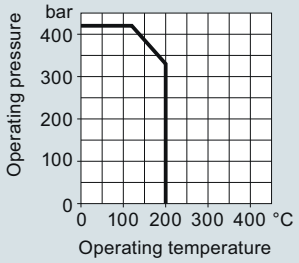

3-way valve manifold DN 8, permissible working pressure as a function of the permissible working temperature

© Siemens AG 2018

3-way valve manifold DN 8

Dimensional drawings

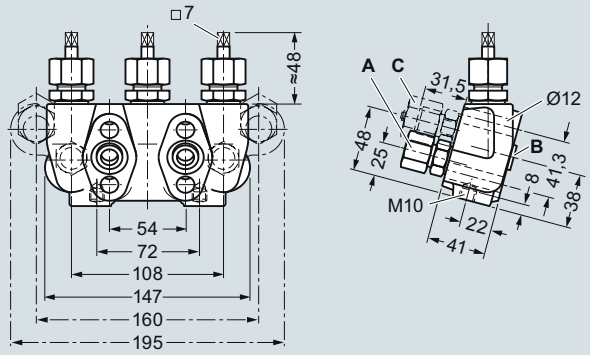

A Process connection (e.g. on primary device): Pipe union with ferrule, diameter 12 mm, S series to DIN 2353
B Transmitter connection: Flange connection to EN 61518, form A
C Test connection: M20 x 1,5
Valve design: internal spindle thread

3-way valve manifold DN 8 (7MF9416-1..) with pipe union, dimensions in mm

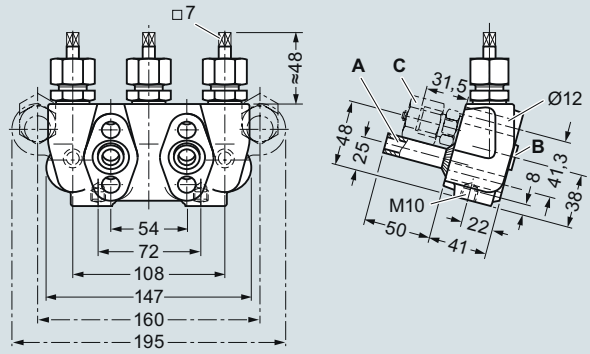

A Process connection (e.g. on primary device): Welding pin, diameter 14 x 2,5
B Transmitter connection: Flange connection to EN 61518, form A
C Test connection: M20 x 1,5
Valve design: internal spindle thread

3-way valve manifold DN 8 (7MF9416-2..) with welding pin, dimensions in mm

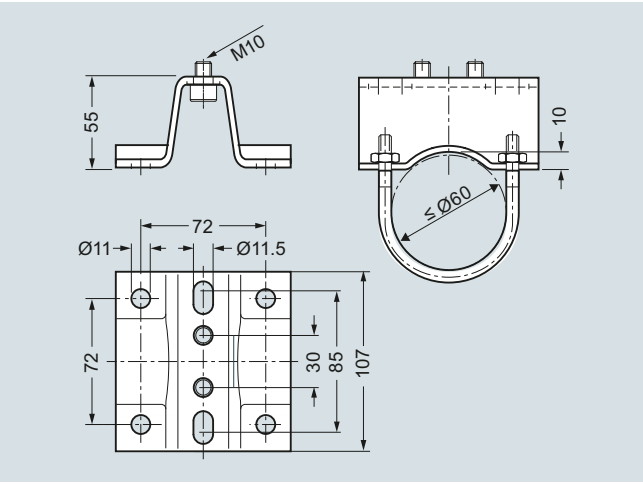

Mounting plate 7MF9006-6.. (M11, M12) for valve manifold, dimensions in mm

Schematics

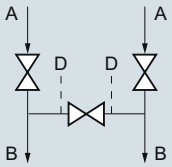

A Process connection
B Transmitter connection
D Vent/test connection

Three-way valve manifold for liquids and gases

3-way valve manifold DN 8, connections

© Siemens AG 2018

Overview

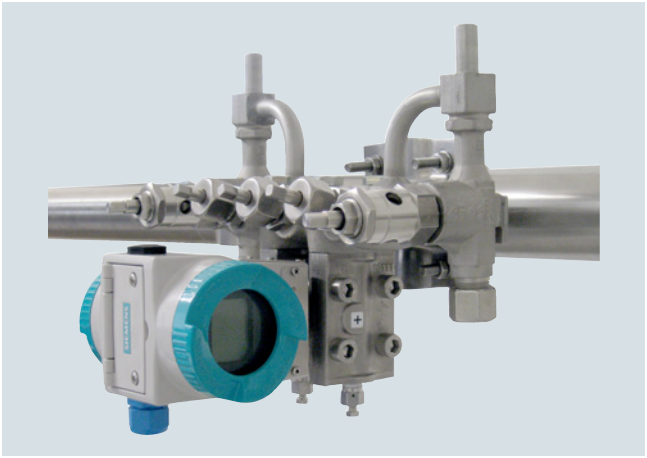

The valve manifold combination DN 5/DN 8 (7MF9416-6..) is for pressure transmitters for differential pressure.

The combination is used to shut off and blow out differential pressure lines and to test the pressure transmitter zero.

In the designs with a test connection, a test device can be connected to test the pressure transmitter characteristic.

Benefits

- Max. working pressure 420 bar (6092 psi)

Application

The valve manifold combination DN 5/DN 8 is designed for vapors.

Design

The valve manifold combination DN 5/DN 8 has a process connection with welding pins.

The connection for the pressure transmitter is designed as as flange connection, while the blow-out connection is designed as a pipe union with ferrule.

The manifold valves have an internal spindle thread, while the blow-out valves have an external spindle thread.

The optional test connections are M20x1.5.

Materials used

	Valve manifold DN 5		Blow-out valves DN 8	
Component	**Material**	**Mat. No.**	**Material**	**Mat. No.**
Housing	P250GH	1.0460	16 Mo 3	1.5415
Head parts	C 35	1.0501	21 CrMo V57	1.7709
Spindles	X 12 CrMoS 17	1.4104	X 20 Cr 13	1.4021
Cones	X 35 CrMo 17	1.4122	X 35 CrMo 17 hardened and tempered	1.4122
Valve seats	X 6 CrNiMoTi	1.4571/316Ti	X 20 Cr 13	1.4021
Packings	PTFE	-	Pure graphite	-
Welding pins	-	-	16 Mo 3	1.5415

Function

- Shutting off the differential pressure lines
- Blowing out the differential pressure lines
- Checking the pressure transmitter zero

As an option it is possible to order a version with a test connection, to which a test device for checking the transmitter characteristic can be connected.

Selection and Ordering data	Article No.
Valve manifold combination DN 5/DN 8 for vapors ↗	**7MF9416-6 ■ A**
↗ Click on the Article No. for the online configuration in the PIA Life Cycle Portal.	
For flanging to pressure transmitters for differential pressure, max. working pressure 420 bar (6092 psi), also available in stainless steel on request (order accessory set with Order code), without certificate	
• without test connection	**C**
• with test connection M20 × 1.5	**D**
Accessories	
Factory test certificate EN 10204–2.2	**7MF9000-8AB**
Material acceptance test certificate EN 10204-3.1	**7MF9000-8AD**

Selection and Ordering data	Order code	Article No.
Further designs[1]		
Please add "**-Z**" to Article No. and specify Order code.		
Accessory set to EN (required for flanging, weight 0.2 kg)		
4x screws $^{7}/_{16}$-20 UNF x $2^{1}/_{8}$ inch to ASME B18.2; chromized steel 2x O-rings to DIN 3771, 20 x 2.65 - S - FPM90, max. permissble 420 bar (6092 psi), 120 °C (248 °F)	**B34**	**7MF9410-5CA**
Accessory set to DIN[2] (required for flanging, weight 0.2 kg)		
4x screws M10x55 to DIN EN 24014; chromized steel 4x washers Ø 10.5 mm to DIN 125; 2x O-rings to DIN 3771, 20 x 2.65 - S - FPM90, max. permissble 420 bar (6092 psi), 120 °C (248 °F);Flange connection to DIN 19213 only permissible up to PN 160!	**B16**	**7MF9010-6CC**

[1] When ordering accessory set together with the valve manifold combination, please use Order code; otherwise use Article No.

[2] Flange connections to DIN 19213 only permissible up to PN 160 (2321 psi)

© Siemens AG 2018

Valve manifold combination DN 5/DN 8

Accessories

Accessory set for valve manifold combination DN 5/DN 8 for flanging

- B34: 4 screws $^{7}/_{16}$-20 UNF x $2^{1}/_{8}$ inch to ASME B18.2.1, 2 O-rings (FPM 90)
- B16: 4 screws M10x55 to DIN EN 24014, 4 washers, 2 O-rings (FPM 90)

Washers Ø 10.5 to DIN 125

O-ring to DIN 3771, 20 x 2.65 - S – FPM90, max. 420 bar (6092 psi), 120 °C (248 °F)

Note: M10 screws only permissible up to PN 160 (2321 psi)!

Characteristic curves

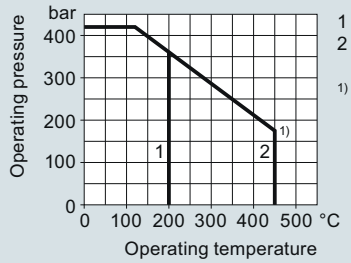

1 Valve manifold
2 Blow-out connection

1) According to DIN 19210 the design can be such that the temperatures for the differential pressure line can be set approx. 100 °C (212 °F) lower than the media temperature.

Permissible operating pressure as a function of the permissible operating temperature

Dimensional drawings

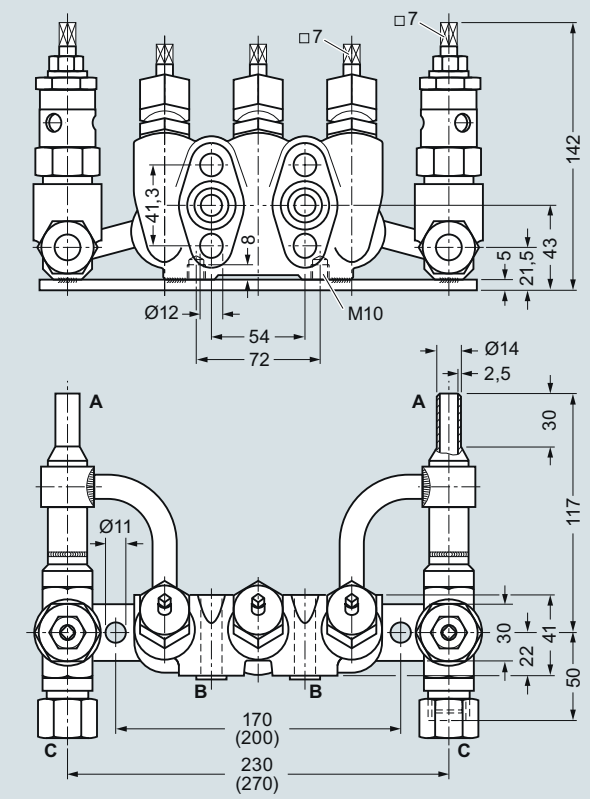

A Process connection (e.g. on primary device): Welding pin
B Transmitter connection: Flange connection to EN 61518, form A
C Blow-out connection: Pipe union with ferrule, diameter 14 mm, S series to DIN 2353

Valve design:
- Manifold valves: internal spindle thread
- Blow-out valves: external spindle thread

Valve manifold combination DN 5/DN 8 (7MF9416-6C.), dimensions in mm (deviating dimensions for 7MF9416-6D. shown in brackets)

Schematics

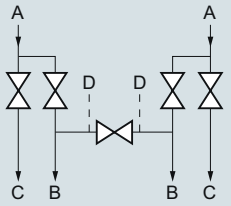

A Process connection
B Transmitter connection
C Blow-out connection
D Test connection

Valve manifold combination for vapors

Valve manifold combination DN 5/DN 8, connections

© Siemens AG 2018

Overview

The valve manifold combination DN 8 (7MF9416-4..) is for pressure transmitters for differential pressure.

It is used to shut off and blow out the differential pressure lines and to check the pressure transmitter zero.

In the designs with a test connection, a test device can be connected to check the pressure transmitter characteristic.

Benefits

- Max. working pressure 420 bar (6092 psi)

Application

The valve manifold combination DN 8 is designed for vapors.

Design

The valve manifold combination DN 8 has a process connection with welding pins.

The connection for the pressure transmitter is designed as as flange connection, while the blow-out connection is designed as a pipe union with ferrule.

The manifold valves have an internal spindle thread, while the blow-out valves have an external spindle thread.

The optional test connection is M20x1.5.

The valve manifold combination DN 8 is supplied with a mounting plate.

Materials used

	Valve manifold		Blow-out valves	
Component	**Material**	**Mat. No.**	**Material**	**Mat. No.**
Housing	P250GH	1.0460	16 Mo 3	1.5415
Head parts	C 35	1.0501	21 CrMo V57	1.7709
Spindles	X 12 CrMoS 17	1.4104	X 20 Cr 13	1.4021
Cones	X 35 CrMo 17	1.4122	X 35 CrMo 17 hardened and tempered	1.4122
Valve seats	X 6 CrNiMoTi	1.4571/316Ti	X 20 Cr 13	1.4021
Packings	PTFE	-	Pure graphite	-
Welding pins	-	-	16 Mo 3	1.5415

Function

- Shutting off the differential pressure lines
- Blowing out the differential pressure lines
- Checking the pressure transmitter zero

As an option it is possible to order a version with a test connection, to which a test device for checking the pressure transmitter characteristic can be connected.

Selection and Ordering data	Article No.
Valve manifold combination DN 8 for vapors ↗	**7MF9416-■■A**
↗ Click on the Article No. for the online configuration in the PIA Life Cycle Portal.	
for flanging to pressure transmitters for differential pressure, with mounting plate, max. working pressure 420 bar (6092 psi), also available in stainless steel on request (order accessory set with Order code), without certificate	
• without test connection	**4C**
• with test connection M20 × 1.5	**4D**
Accessories	
Factory test certificate EN 10204–2.2	**7MF9000-8AB**
Material acceptance test certificate EN 10204-3.1	**7MF9000-8AD**

Selection and Ordering data	Order code	Article No.
Further designs[1]		
Please add "**-Z**" to Article No. and specify Order code.		
Accessory set to EN (required for flanging, weight 0.2 kg)		
4x screws $^{7}/_{16}$-20 UNF x $2^{1}/_{8}$ inch to ASME B18.2; chromized steel 2x O-rings to DIN 3771, 20 x 2.65 - S - FPM90, max. permissble 420 bar (6092 psi), 120 °C (248 °F)	**B34**	**7MF9410-5CA**
Accessory set to DIN[2] (required for flanging, weight 0.2 kg)		
4x screws M10x55 to DIN EN 24014; chromized steel 4x washers Ø 10.5 mm to DIN 125; 2x O-rings to DIN 3771, 20 x 2.65 - S - FPM90, max. permissble 420 bar (6092 psi), 120 °C (248 °F) Flange connection to DIN 19 213 only permissible up to PN 160!	**B16**	**7MF9010-6CC**

1) When ordering accessory set together with the valve manifold combination, please use Order code; otherwise use Article No.
2) Flange connections to DIN 19213 only permissible up to PN 160 (2321 psi)

Accessories

Accessory set for valve manifold combination DN 8 for flanging

- B34: 4 screws $^{7}/_{16}$-20 UNF x $2^{1}/_{8}$ inch to ASME B 18.2.1, 2 O-rings (FPM 90)
- B16: 4 screws M10x55 to DIN EN 24014, 4 washers, 2 O-rings (FPM 90)

Washers Ø 10.5 to DIN 125

O-ring to DIN 3771, 20 x 2.65 – S – FPM90, max. 420 bar (6092 psi), 120 °C (248 °F)

Note: M10 screws only permissible up to PN 160 (2321 psi)!

© Siemens AG 2018

Valve manifold combination DN 8

Characteristic curves

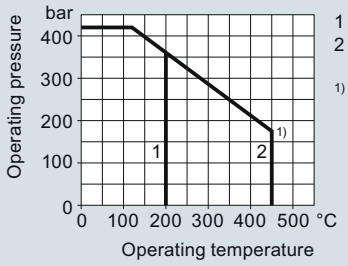

1 Valve manifold
2 Blow-out connection

1) According to DIN 19210 the design can be such that the temperatures for the differential pressure line can be set approx. 100 °C (212 °F) lower than the media temperature.

Permissible operating pressure as a function of the permissible operating temperature

Schematics

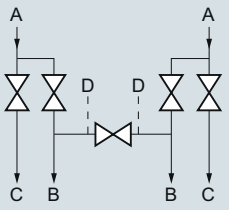

A Process connection
B Transmitter connection
C Blow-out connection
D Test connection

Valve manifold combination for vapors

Valve manifold combination DN 8, connections

Dimensional drawings

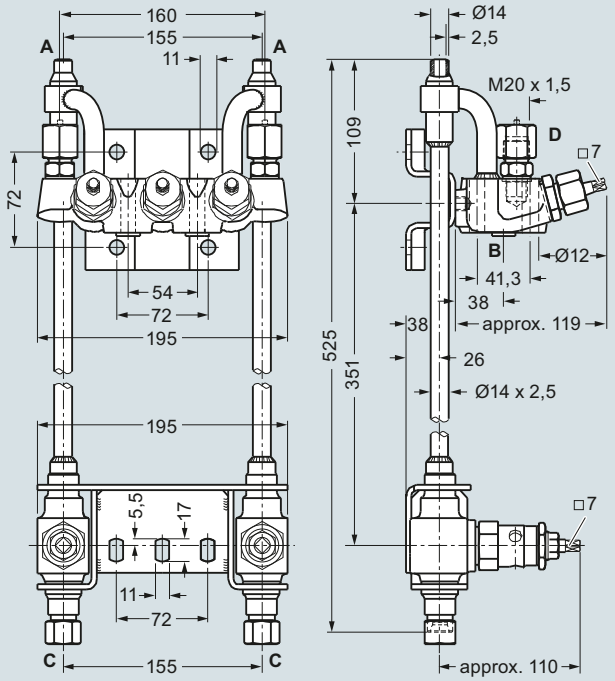

A Process connection (e.g. on primary device): Welding pin
B Transmitter connection: Flange connection to EN 61518, form A
C Blow-out connection: Pipe union with ferrule, diameter 14 mm, S series to DIN 2353
D Test connection (only with Article No. 7MF9416-4D.): M20 x 1,5
Valve design:
- Manifold valves: internal spindle thread
- Blow-out valves: external spindle thread

Valve manifold combination DN 8 (7MF9416-4..), dimensions in mm

© Siemens AG 2018

Overview

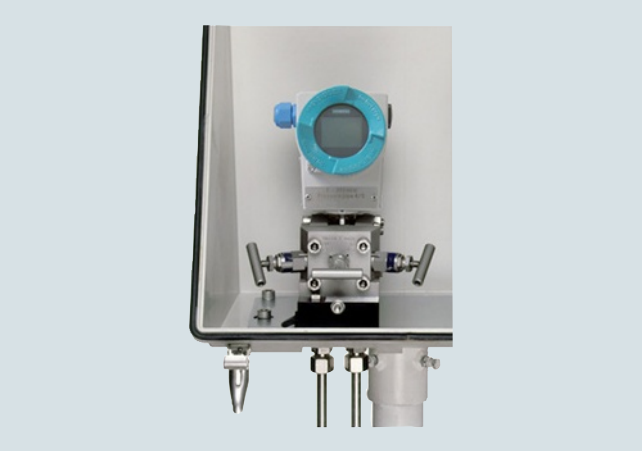

The 2-spindle, 3-spindle and 5-spindle valve manifolds (7MF9412-1..) are used to shut off the differential pressure lines and to check the transmitter zero.

The five-spindle valve manifold permits venting on the transmitter side and checking of the transmitter characteristic.

These valve manifolds are preferentially used when mounting in protective boxes. In addition, they can also be used for wall, frame or pipe mounting together with the mounting bracket.

Transmitters of the DS series can be operated and read from the front when using these valve manifolds.

Application

The valve manifolds DN 5 are designed for liquids and vapors and for installing in protective boxes.

Each is available in a version for oxygen on request

Design

All versions of the spindle manifolds have a process connection ½-14 NPT.

The connection for the pressure transmitter is always designed as a flange connection to IEC 61518/DIN EN 61518, Form A.

The 2-spindle and the 5-spindle valve manifold have in addition a vent and test connection ¼-18 NPT.

The valves have an external spindle thread.

Materials used

Components	Material	Mat. No.
Housing	X 2 CrNiMo 17 13 2	1.4404/316L
Cones	X 6 CrNiMoTi 17 12 2	1.4571/316Ti
Spindles	X 2 CrNiMo 18 10	1.4404/316L
Head parts	X 5 CrNiMo 18 10	1.4401/316
Packings	PTFE	-

Functions

Functions of all valve manifolds:

- Shutting off the differential pressure lines
- Checking the pressure transmitter zero

Additional functions of the 2-spindle and 5-spindle valve manifolds through the vent and test connection:

- Venting on the transmitter side
- Checking the pressure transmitter characteristic

Selection and Ordering data	Article No.
Valve manifolds DN 5 for mounting in protective boxes ↗	**7 M F 9 4 1 2 - ■ ■ A**
↗ Click on the Article No. for the online configuration in the PIA Life Cycle Portal.	
for liquids and gases for flanging to pressure transmitters for absolute and differential pressure Material: stainless steel, mat. No: 1.4404/316L max. working pressure 420 bar (6092 psi) (order accessory set with Order code), without certificate	
• 2-spindle valve manifold with rotatng sleeve G½	**1 B**
• 2-spindle valve manifold with flange connection	**1 C**
• 3-spindle valve manifold	**1 D**
• 5-spindle valve manifold	**1 E**
Accessories	
Factory test certificate EN 10204–2.2	**7MF9000-8AB**
Material acceptance test certificate EN 10204-3.1	**7MF9000-8AD**

Selection and Ordering data	Order code	Article No.
Further designs[1)]		
Please add "**-Z**" to Article No. and specify Order code.		
Accessory set to EN (connection between valve manifold and pressure transmitter)		
for valve manifold 7MF9412–1C.		
2x screws $^{7}/_{16}$-20 UNF x 2 inch to ASME B18.2.1; chromized steel 1x O-ring to DIN 3771, 20 x 2.65 - S - FPM90, max. permissble 420 bar (6092 psi), 120 °C (248 °F)	**F32**	**7MF9412-6CA**
2x screws $^{7}/_{16}$-20 UNF x 2 inch to ASME B18.2.1; chromized steel 1x gasket made of PTFE, max. permissible 420 bar (6092 psi), 80 °C (176 °F)[2)]	**F35**	**7MF9412-6DA**
for valve manifold 7MF9412–1D and -1E.		
4x screws $^{7}/_{16}$-20 UNF x 2 inch to ASME B18.2.1; chromized steel 2x O-rings to DIN 3771, 20 x 2.65 - S - FPM90, max. permissble 420 bar (6092 psi), 120 °C (248 °F)[2)]	**F34**	**7MF9412-6GA**
4x screws $^{7}/_{16}$-20 UNF x 2 inch to ASME B18.2.1; chromized steel 2x flat gaskets made of PTFE, max. permissible 420 bar (6092 psi), 80 °C (176 °F)[2)]	**F36**	**7MF9412-6HA**

© Siemens AG 2018

1

2-, 3- and 5-spindle valve manifolds for installing in protective boxes

Selection and Ordering data	Order code	Article No.
Further designs[1]		
Please add "**-Z**" to Article No. and specify Order code.		
Accessory set to DIN (connection between valve manifold and pressure transmitter)		
For valve manifold 7MF9412–1C.		
2x screws M10x50 to DIN EN 24014; chromized steel 2x washers Ø 10.5 mm to DIN 125; 1x O-ring to DIN 3771, 20 x 2.65 - S - FPM90, max. permissble 420 bar (6092 psi), 120 °C (248 °F)[2]	**F12**	**7MF9412-6AA**
2x screws M10x50 to DIN EN 24014; chromized steel 2x washers Ø 10.5 mm to DIN 125; 1x gasket made of PTFE, max. permissible 420 bar (6092 psi), 80 °C (176 °F)[2]	**F15**	**7MF9412-6BA**
For valve manifold 7MF9412–1D and -1E.		
4x screws M10x50 to DIN EN 24014; chromized steel 4x washers Ø 10.5 mm to DIN 125; 2x O-rings to DIN 3771, 20 x 2.65 - S - FPM90, max. permissble 420 bar (6092 psi), 120 °C (248 °F)[2]	**F14**	**7MF9412-6EA**
4x screws M10x50 to DIN EN 24014; chromized steel 4x washers Ø 10.5 mm to DIN 125; 2x flat gaskets made of PTFE, max. permissible 420 bar (6092 psi), 80 °C (176 °F)[2]	**F16**	**7MF9412-6FA**
Mounting bracket required for wall mounting or for securing to mounting rack, with bolts for mounting on valve manifold		
• for valve manifolds 7MF9412-1B. and -1C.	**M14**	**7MF9006-6LA**
• for valve manifold 7MF9412-1D.	**M17**	**7MF9006-6NA**
• for valve manifold 7MF9412-1E.	**M18**	**7MF9006-6PA**
Mounting clip		
2 off, to secure mounting bracket to pipe	**M16**	**7MF9006-6KA**
Valve manifold 100 bar		
Oil- and grease-free cleaning for oxygen applications, max. pressure PN 100 (1450 psi) and max. temperature 60 °C (140 °F)		
• for valve manifolds 7MF9412-1B. and -1C.	**S12**	
• for valve manifold 7MF9412-1D.	**S13**	
• for valve manifold 7MF9412-1E.	**S14**	
NACE MR-0175-certified incl. acceptance test certificate 3.1 to EN 10204	**D07**	

1) When ordering accessory set or mounting together with the valve manifolds, please use Order code; otherwise use Article No.
2) Flange connections with M10 screws only permissible up to PN 160 (2321 psi)!

Accessories

Accessory set for 2-, 3- and 5-spindle valve manifolds (Connection between manifold and transmitter)

2-spindle valve manifold DN 5 with flange connection

- F32: 2 screws 7/16 20 UNF x 2 inch to ASME B 18.2.1, 1 O Ring (FPM90)
- F35: 2 screws 7/16 20 UNF x 2 inch to ASME B 18.2.1, 1 flat-gasket
- F12: 2 screws M10x50 to DIN EN 24014, 2 washers, 1 O-ring (FPM90)
- F15: 2 screws M10x50 to DIN EN 24014, 2 washers, 1 flat gasket

3-spindle and 5-way valve manifold DN 5

- F34: 4 screws 7/16 20 UNF x 2 inch toASME B 18.2.1, 2 O-rings (FPM90)
- F36: 4 screws 7/16 20 UNF x 2 inch toASME B 18.2.1, 2 flat-gaskets
- F14: 4 screws M10x50 to DIN EN 24014, 4 washers, 2 O-rings (FPM90)
- F16: 4 screws M10x50 to DIN EN 24014, 4 washers, 2 flat-gaskets

Washers Ø 10.5 to DIN 125

Flat-gaskets made of PTFE, max. 420 bar (6092 psi), 80 °C (176 °F)

O-ring to DIN 3771, 20 x 2.65 - S - FPM90; max.420 bar (6092 psi), 120 °C (248 °F)

Note:
Flange connections with M10 screws only permissible up to PN 160 (2321 psi)!

Mounting bracket for wall mounting or for securing to mounting rack

With bolds for mounting on valve manifold

- M14: For 2-spindle valve manifold DN 5
- M17: For 3-spindle valve manifold DN 5
- M18: For 5-spindle valve manifold DN 5

Mounting clips (2 off)

- M16: For securing the mounting brackets M14, M17 and M18 to pipe

Valve manifold 100 bar, suitable for oxygen

- S12: For 2-spindle valve manifold DN 5
- S13: For 3-spindle valve manifold DN 5
- S14: For 5-spindle valve manifold DN 5

Characteristic curves

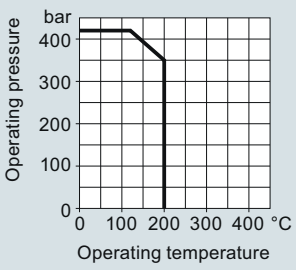

420 bar (6092 psi) at 120 °C (248 °F)
350 bar (5076 psi) at 200 °C (392 °F)

Permissible operating pressure as a function of the permissible operating temperature

© Siemens AG 2018

Dimensional drawings

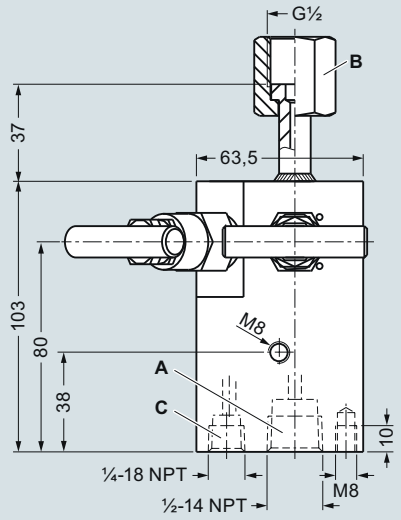

A Process connection: ½-14 NPT
B Transmitter connection: Nipple to DIN 16284, G½, SW 27
C Vent / test connection: ¼-18 NPT

2-spindle valve manifold DN 5 (7MF9412-1B..) with rotating sleeve, dimensions in mm

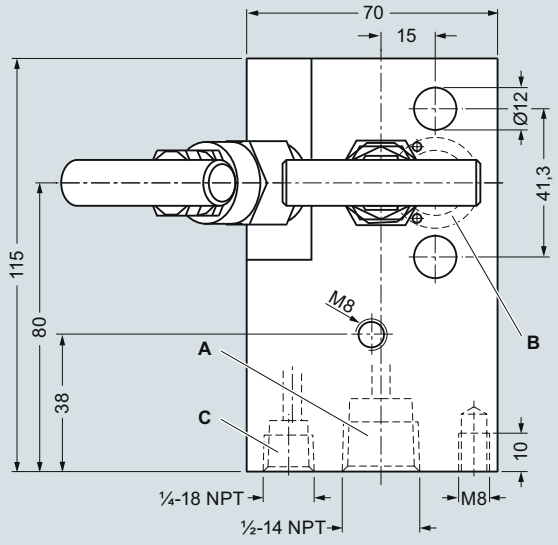

A Process connection: ½-14 NPT
B Transmitter connection: Flange connection to EN 61518, form A
C Vent / test connection: ¼-18 NPT
Valve design: external spindle thread

2-spindle valve manifold DN 5 (7MF9412-1C..), dimensions in mm

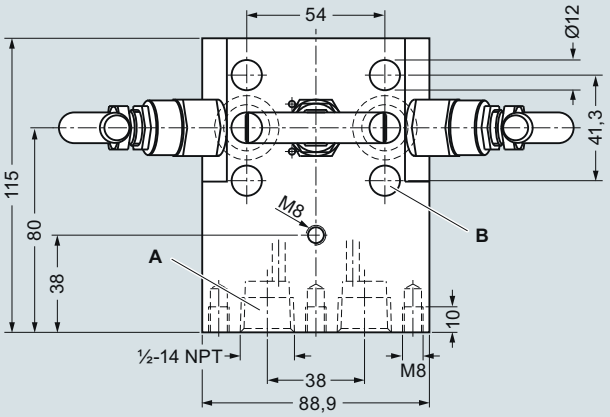

A Process connection: ½-14 NPT
B Transmitter connection: Flange connection EN 61518, form A
Valve design: external spindle thread

3-spindle valve manifold DN 5 (7MF9412-1D..), dimensions in mm

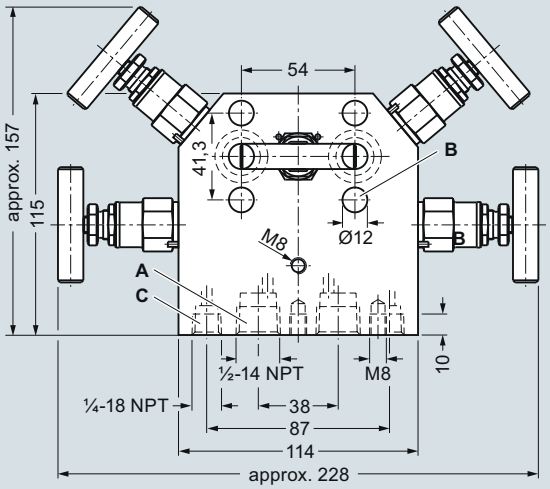

A Process connection: ½-14 NPT
B Transmitter connection: Flange connection to EN 61518, form A
C Vent / test connection: ¼-18 NPT
Valve design: external spindle thread

5-spindle valve manifold DN 5 (7MF9412-1E..), dimensions in mm

© Siemens AG 2018

2-, 3- and 5-spindle valve manifolds for installing in protective boxes

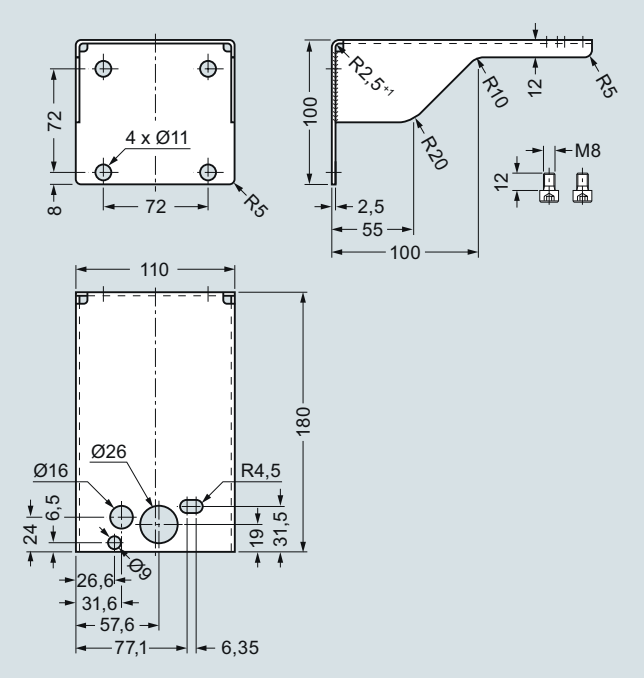

Mounting bracket (7MF9006-6LA)/(M14) for 2-spindle valve manifolds, dimensions in mm

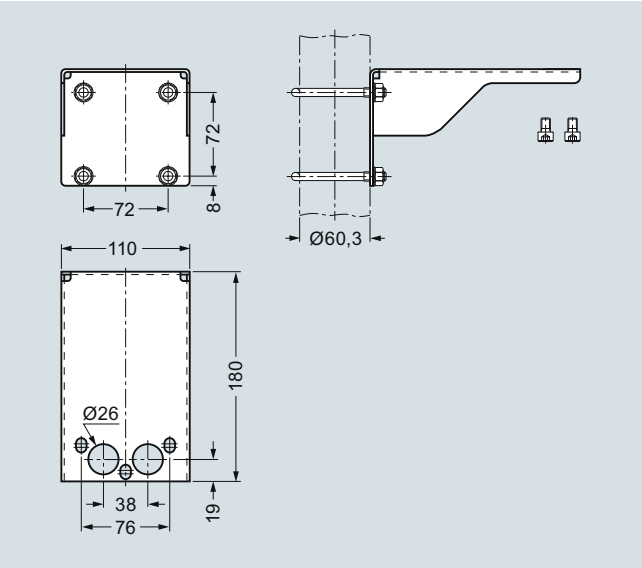

Mounting bracket (7MF9006-6NA)/(M17) for 3-spindle valve manifolds, dimensions in mm

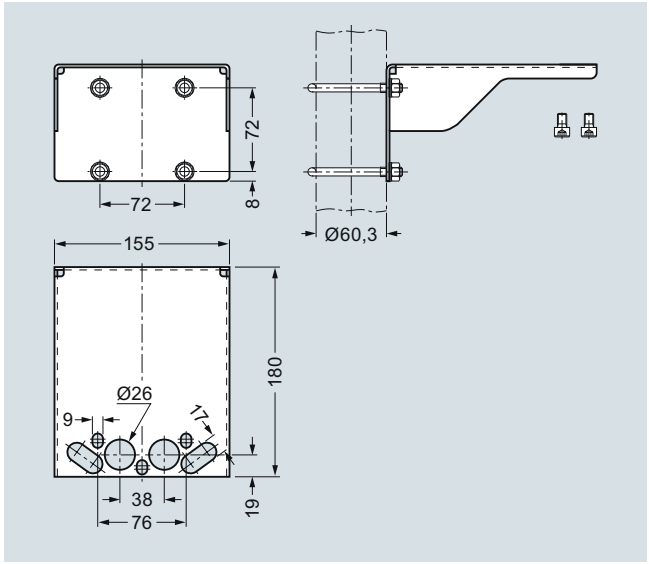

Mounting bracket (7MF9006-6PA)/(M18) for 5-spindle valve manifolds, dimensions in mm

Schematics

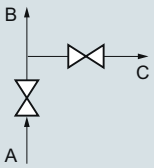

A Process connection
B Connection for pressure gauge or transmitter for pressure or absolute pressure
C Vent/test connection

2-spindle valve manifold DN 5 (with rotating sleeve G½ or flange connection), connections

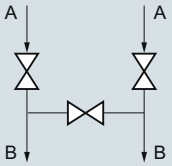

A Process connection
B Transmitter connection

3-spindle valve manifold DN 5, connections

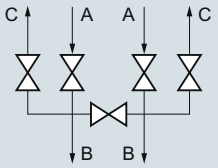

A Process connection
B Transmitter connection
C Vent/test connection

5-spindle valve manifold DN 5, connections

© Siemens AG 2018

3- and 5-spindle valve manifolds for vertical angular differential pressure lines

Overview

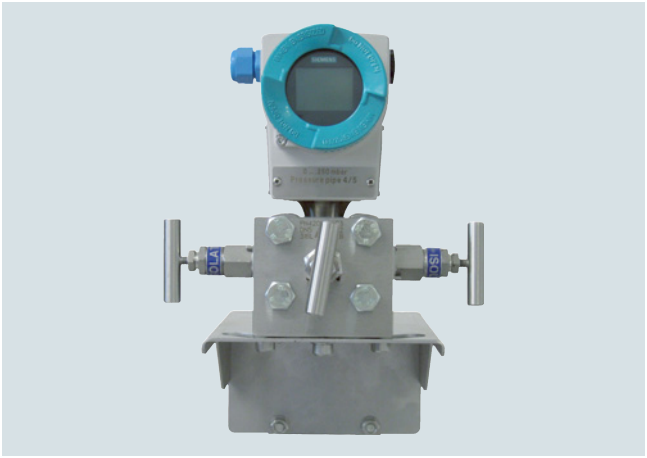

These 3-spindle and 5-spindle valve manifolds 7MF9413-1.. were developed specially for vertical differential pressure lines.

The valve manifolds are used to shut off the differential pressure lines and to check the pressure transmitter zero.

The 5-spindle valve manifold permits venting on the transmitter side and checking of the pressure transmitter characteristic.

Benefits

- For vertical differential pressure lines
- Max. operating pressure 420 bar (6092 psi)
- Transmitters of the DS series can be operated and read from the front.

Application

The 3-spindle and 5-spindle valve manifolds for vertical differential pressure lines are for liquids and gases. The valve manifolds are flanged on the pressure transmitter.

Design

All versions of the spindle valve manifolds have a process connection ½-14 NPT.

The connection for the pressure transmitter is always designed as a flange connection to IEC 61518/DIN EN 61518, form B .

The 2-spindle and the 5-spindle valve manifold have in addition a vent and test connection ¼-18 NPT.

Materials used:

Component	Material	Mat. No.
Housing	X 2 CrNiMo 17 13 2	1.4404/316L
Cones	X 6 CrNiMoTi 17 12 2	1.4571/316Ti
Spindles	X 2 CrNiMo 18 10	1.4404/316L
Head parts	X 5 CrNiMo 18 10	1.4401/316
Packings	PTFE	-

Function

Functions of all valve manifolds:

- Shutting off the differential pressure lines
- Checking the pressure transmitter zero

Additional functions of the 2-spindle and 5-spindle valve manifolds through the vent and test connection:

- Venting on the transmitter side
- Checking the pressure transmitter characteristic

Selection and Ordering data	Article No.
Valve manifolds for vertical differential pressure lines ↗	**7MF9413 -** ■■ **A**
↗ Click on the Article No. for the online configuration in the PIA Life Cycle Portal.	
for liquids and gases for flanging to pressure transmitters for absolute and differential pressure Material: stainless steel, mat. No: 1.4404/316L max. working pressure 420 bar (6092 psi) (order accessory set with Order code), without certificate	
• 3-spindle valve manifold	**1 D**
• 5-spindle valve manifold	**1 E**
Accessories	
Factory test certificate EN 10204–2.2	**7MF9000-8AB**
Material acceptance test certificate EN 10204-3.1	**7MF9000-8AD**

Selection and Ordering data	Order code	Article No.
Further designs[1]		
Please add "**-Z**" to Article No. and specify Order code.		
Accessory set to EN (connection between valve manifold and pressure transmitter)		
4x screws $^{7}/_{16}$-20 UNF x 1¾ inch to ASME B18.2.1; chromized steel 2x flat gaskets made of PTFE, max. permissible 420 bar (6092 psi), 80 °C (176 °F)	**K36**	**7MF9411-5DB**
Accessory set to DIN[2] (connection between valve manifold and pressure transmitter)		
4x screws M10x45 to DIN EN 24014; chromized steel 4x washers Ø 10.5 mm to DIN 125; 2x flat gaskets made of PTFE, max. permissible 420 bar (6092 psi), 80 °C (176 °F); Flange connection with M10 screws only permissible up to PN 160 (2321 psi).	**K16**	**7MF9411-6BB**
Mounting bracket		
required **for wall mounting** or for securing to mounting rack, with bolts for mounting on valve manifold		
• for valve manifold 7MF9413-1D.	**M17**	**7MF9006-6NA**
• for valve manifold 7MF9413-1E.	**M18**	**7MF9006-6PA**
required **for mounting on 2" standpipe**, with bolts for mounting on valve manifold		
• for valve manifold 7MF9413-1D.	**M19**	**7MF9006-6QA**
Mounting clip		
2 off, to secure mounting bracket to pipe	**M16**	**7MF9006-6KA**
Valve manifold 100 bar (1450 psi)		
suitable for oxygen		
• for valve manifold 7MF9413-1D.	**S13**	
• for valve manifold 7MF9413-1E.	**S14**	
NACE MR-0175-certified incl. acceptance test certificate 3.1 to EN 10204	**D07**	

[1] When ordering accessory set or mounting together with the multiway cock, please use Order code; otherwise use Article No.

[2] Flange connections to DIN 19213 only permissible up to PN 160 (2321 psi)!

© Siemens AG 2018

3- and 5-spindle valve manifolds for vertical angular differential pressure lines

Accessories

Accessory set (connection between manifold and transmitter)

- K36: 4 screws $^{7}/_{16}$-20 UNF x 1¾ inch to ASME B18.2.1, 2 flat gaskets
- K16: 4 screws M10x45 to DIN EN 24014, 4 washers, 2 flat gaskets

Washers Ø 10.5 to DIN 125

Flat gaskets made of PTFE, max. 420 bar (6092 psi), 80 °C (176 °F)

Note: Flange connection with M10 screws only permissible up to PN 160 (2321 psi)!

Mounting bracket for wall mounting or for securing to mounting rack

With bolts for mounting on valve manifold

- M17: For 3-spindle valve manifold
- M18: For 5-spindle valve manifold

Mounting bracket for mounting on 2" standpipe

With bolts for mounting on valve manifold

- M19: For 3-spindle valve manifold

Mounting clips (2 off)

For securing the mounting brackets M17, M18 and M19 to pipe

Valve manifold 100 bar, suitable for oxygen

- For 3-spindle valve manifold
- For 5-spindle valve manifold

Characteristic curves

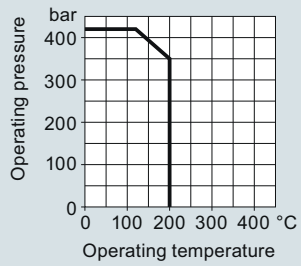

420 bar (6092 psi) at 120 °C (248 °F)
350 bar (5076 psi) at 200 °C (392 °F)

Permissible operating pressure as a function of the permissible operating temperature

Dimensional drawings

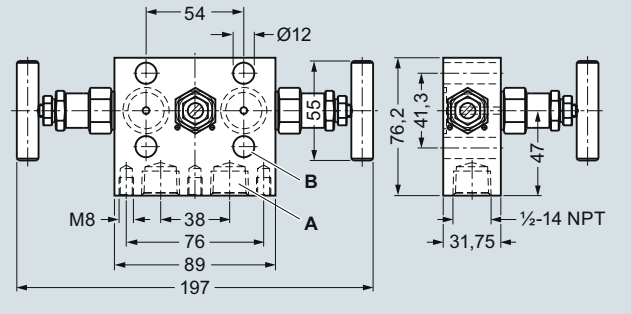

3-spindle valve manifold 7MF9413-1D. for vertical differential pressure lines, dimensions in mm

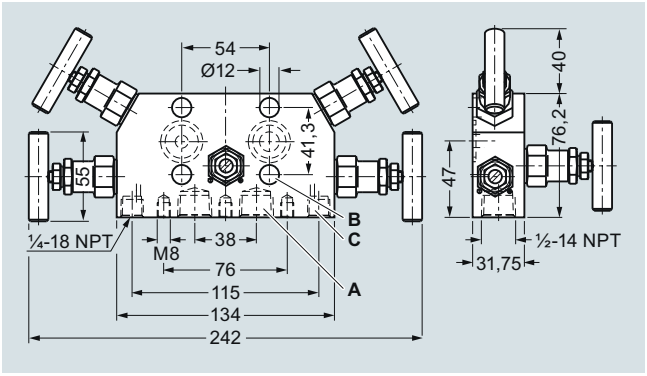

5-spindle valve manifold 7MF9413-1E. for vertical differential pressure lines, dimensions in mm

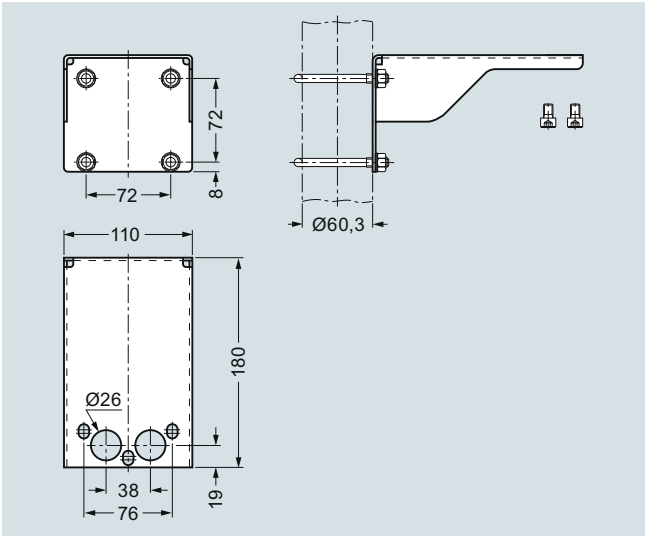

Mounting bracket (7MF9006-6NA)/(M17) for 3-spindle valve manifolds, dimensions in mm

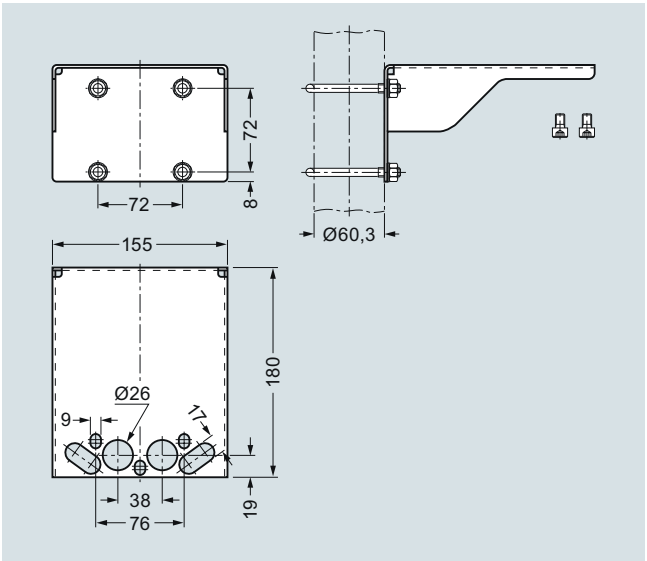

Mounting bracket (7MF9006-6PA)/(M18) for 5-spindle valve manifolds, dimensions in mm

© Siemens AG 2018

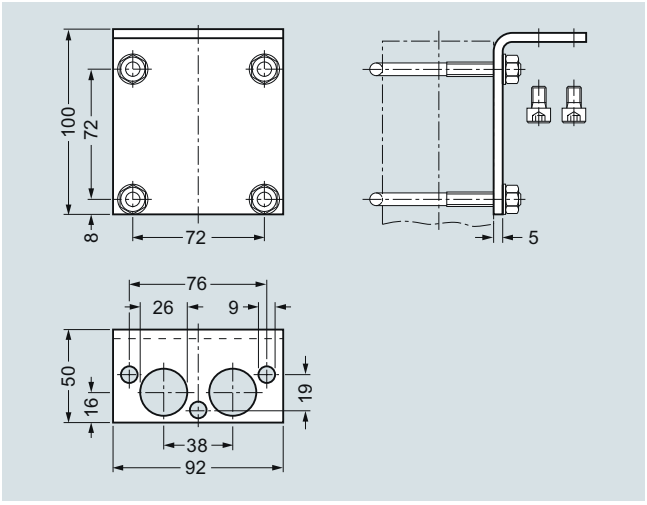

Mounting bracket (7MF9006-6QA)/(M19) for 3-spindle valve manifolds, dimensions in mm

Schematics

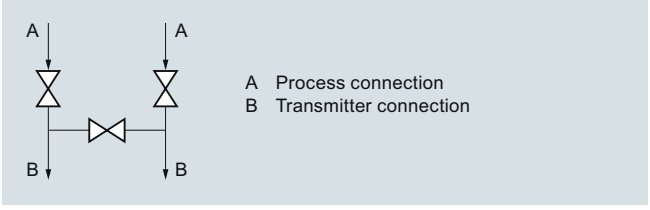

3-spindle valve manifold for vertical differential pressure lines, connections

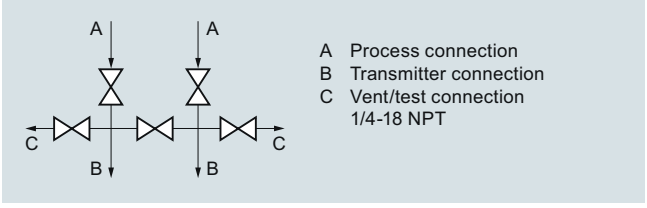

5-spindle valve manifold for vertical differential pressure lines, connections

© Siemens AG 2018

Low-pressure multiway cock

Overview

The low-pressure multiway cock 7MF9004-4CA/-4DA can be flanged to pressure transmitters for differential pressure.

Benefits

- Robust design
- For liquids and gases
- One-hand operation

Design

The multiway cock has 2 process connections and 2 test connections, which are available in 2 versions (with sealing screws $G^3/_8$ or quick-release couplings). The housing is made of hot-pressed brass CuZn39Pb3, CW 614N. Test connections with sealing screws or with self-sealing quick-release couplings.

Note: An accessory set is always required for flanging of the multiway cock to a differential pressure transmitter.

Function

- Shutting off the differential pressure lines
- Testing the pressure transmitter zero
- Testing the pressure transmitter characteristic

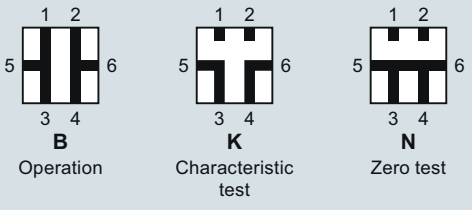

Cock positions; the symbols are printed on the cock

Selection and Ordering data	Article No.
Low-pressure multiway cock for liquids and gases, for flanging to pressure transmitters, max. working pressure 25 bar (363 psi), max. working temperature 60 °C (140 °F) (up to 80 °C (176 °F) for a short time), weight 1.75 kg (without accessory set)	
Test connections	
2x sealing screws $G^3/_8$	**7MF9004-4CA**
2x quick-release couplings	**7MF9004-4DA**
Accessories	
Test report to EN 10204-3.1	**7MF9000-8AB**
Material acceptance test certificate to EN 10204-3.1	**7MF9000-8AD**

Selection and Ordering data	Order code	Article No.
Further designs[1]		
Please add "**-Z**" to Article No. and specify Order code.		
Accessory set to EN (required for flanging, weight 0.2 kg)		
4x screws $^7/_{16}$-20 UNF x 1 inch to ASME B18.2.1; chromized steel 2x gaskets made of PTFE, max. permissible temperature 80 °C (176 °F)	**L31**	**7MF9004-5CC**
Accessory set to DIN (required for flanging, weight 0.2 kg)		
4x screws M10x25 to DIN EN 24017; chromized steel 4x washers Ø 10.5 mm to DIN 125; 2x gaskets made of PTFE, max. permissible temperature 80 °C (176 °F)		
• Standard design	**L11**	**7MF9004-6AD**
• Version for oxygen	**L15**	**7MF9004-6AE**
Multiway cock in oil-free and grease-free design BAM-tested lubricant, gasket suitable for oxygen	**S11**	
Mounting bracket required **for wall mounting** or for securing on rack (72 mm grid), made of electrogalvanized sheet-steel, weight 0.85 kg	**M13**	**7MF9004-6AA**

[1] When ordering accessory set or mounting together with the multiway cock, please use Order code; otherwise use Article No.

© Siemens AG 2018

Accessories

Accessory set for low-pressure multiway cock

- L31: 4 screws $^{7}/_{16}$-20 UNF x 1 inch, 2 flat gaskets
- L11: 4 screws M10x25 to DIN EN 24017, 4 washers, 2 flat gaskets
- L15 (suitable for oxygen): 4 screws M10x25 to DIN EN 24017, 4 washers, 2 flat gaskets

Washers Ø 10.5 to DIN 125

Flat gaskets made of PTFE, max. permissible temperature 80 °C (176 °F)

Multiway cock in oil-free and grease-free design

- S11: BAM-tested lubricant, gasket suitable for oxygen

Mounting brackets

- M13: Required for wall mounting or for securing on rack (72 mm grid); made of electrogalvanized sheet-steel

Options

Test connections
- 2 sealing screws G$^{3}/_{8}$
- 2 quick-release couplings

Characteristic curves

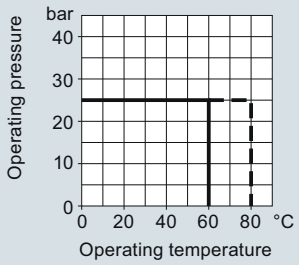

Low-pressure multiway cock, permissible operating pressure as a function of the permissible operating temperature

Dimensional drawings

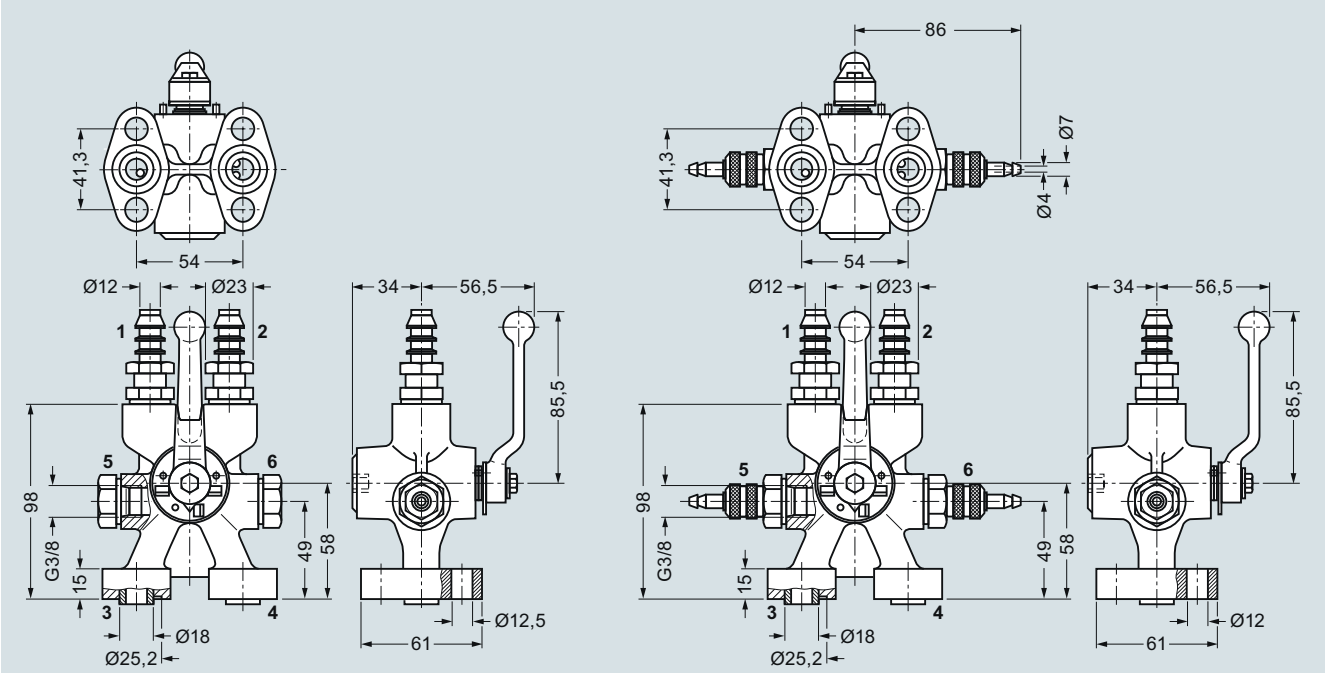

1 and 2 Process connections (hose sleeve, diameter 12 mm)
3 and 4 Transmitter connections (EN 61518, form A)
5 and 6 Text connections (with sealing screws G3/8 or with quick-release couplings

Low-pressure multiway cock 7MF9004-4CA/-4DA for direct flanging to pressure transmitters for differential pressure, dimensions in mm

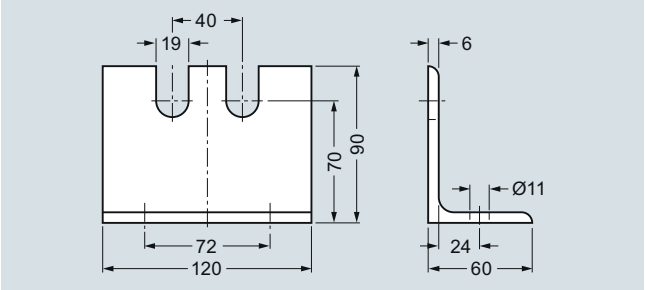

Mounting bracket 7MF9004-6AA (M13), dimensions in mm

© Siemens AG 2018

1

Oval flange

Overview

The oval flange 7MF9408-2C. for pressure transmitters for absolute pressure and differential pressure has a ½-14 NPT female thread and is designed for max. operating pressure 400 bar (5800 psi).

Accessories

Accessory set for oval flange

- E36: 2 screws $^{7}/_{16}$-20 UNF x 1½ inch to ASME B18.2.1, 1 flat gasket
- E34: 2 screws $^{7}/_{16}$-20 UNF x 1½ inch to ASME B18.3, 1 O-ring (FPM 90)
- E13: 2 screws M10x40 to DIN EN 4762, 2 washers, 1 O-ring (FPM 90)
- E16: 2 screws M10x40 to DIN EN ISO 4762, 2 washers, 1 flat gasket

Washers Ø 10.5 to DIN 125

Flat gaskets made of PTFE, max. 420 bar (6092 psi), 80 °C (176 °F)

O-ring to DIN 3771, 20 x 2.65 – S – FPM90, max. 420 bar (6092 psi), 120 °C (248 °F)

Note: M10 screws only permissible up to PN 160 (2321 psi)!

Selection and Ordering data	Article No.
Oval flange with female thread ½-14 NPT, max. working pressure 420 bar (6092 psi), flange connection to IEC 61518/DIN EN 61518, form A	
Material	
P250GH, mat. No.: 1.0460	**7MF9408-2CE**
X 2 CrNiMo 17 13 2, mat. No. 1.4404/316L	**7MF9408-2CL**

Selection and Ordering data	Order code	Article No.
Further designs[1] Please add "**-Z**" to Article No. and specify Order code.		
Accessory set to EN		
2x screws $^{7}/_{16}$-20 UNF x 1½ inch to ASME B 18.2.3; chromized steel 1x flat gasket made of PTFE, max. permissible 420 bar (6092 psi), 80 °C (176 °F)	**E36**	**7MF9408-5DA**
2x screws $^{7}/_{16}$-20 UNF x 1½ inch to ASME B 18.2.3; chromized steel 1x O-ring to DIN 3771, 20 x 2.65 - S - FPM90, max. permissble 420 bar (6092 psi), 120 °C (248 °F)	**E34**	**7MF9408-5CA**
Accessory set to DIN		
2x screws M10x40 to DIN EN ISO 4762; chromized steel 2x washers Ø 10.5 mm to DIN 125; 1x O-ring to DIN 3771, 20 x 2.65 - S - FPM90, max. permissble 160 bar (2321 psi), 120 °C (248 °F)[2]	**E13**	**7MF9408-6AA**
2x screws M10x40 to DIN EN ISO 4762; chromized steel 2x washers Ø 10.5 mm to DIN 125; 1x flat gasket made of PTFE, max. permissible 160 bar (2321 psi), 80 °C (176 °F)[2]	**E16**	**7MF9408-6BA**
NACE MR-0175-certified incl. acceptance test certificate 3.1 to EN 10204	**D07**	

[1] When ordering accessory set together with the oval flange, please use Order code; otherwise use Article No.

[2] Flange connections with M10 screws only permissible up to PN 160 (2321 psi)

Dimensional drawings

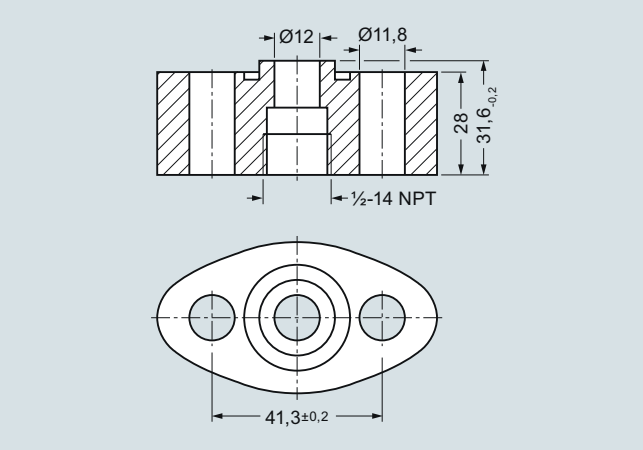

Oval flange 7MF9408-2C., dimensions in mm

© Siemens AG 2018

Overview

Adapters enable e.g. a transition from medium connections with NPT thread to shut-off valves to DIN 16270 ... 16272 or pipes in conjunction with a connection gland (e.g. 7MF9008).

Design

The connection pieces are made of X 6 CrNiMoTi 17 12 2, mat. No. 1.4571 and available in 3 versions

- Thread ¼-18 NPT and connection shank G½ to DIN EN 837-1
- Thread ½-14 NPT and connection shank G½ to DIN EN 837-1
- Thread ½-14 NPT and thread ½-14 NPT

Selection and Ordering data	Article No.
Mounting collar Max. operating pressure: 689 bar (10 000 psi), Weight: 0.2 kg	
with thread ¼-18 NPT – G½	**7MF9001-1AA**
with thread ½-14 NPT – G½	**7MF9001-1CA**
with thread ½-14 NPT – ½-14 NPT	**7MF9001-1DA**
with thread ½-14 NPT – M20 x 1.5	**7MF9001-1EA**
with pipe union with ferrule 12 S, max. operating pressure 630 bar (9 100 psi), ∅ 12 mm – ½-14 NPT	
• 9 SMnPb 28, mat. No. 1.0718	**7MF9008-1CA**
• X 6 CrNiMoTi 17 122, mat. No. 1.4571	**7MF9008-1CB**
with pipe union with ferrule 14 S, max. operating pressure 630 bar (9 100 psi), ∅ 14 mm – ½-14 NPT	
• 9 SMnPb 28, mat. No. 1.0718	**7MF9008-1CC**
• X 6 CrNiMoTi 17 122, mat. No. 1.4571	**7MF9008-1CD**

Dimensional drawings

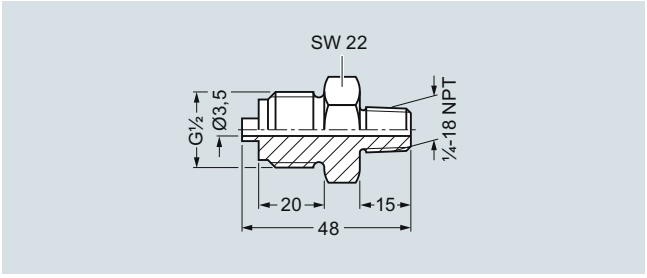

Connection piece with thread ¼-18 NPT and connection shank G½ (7MF9001-1AA), dimensions in mm

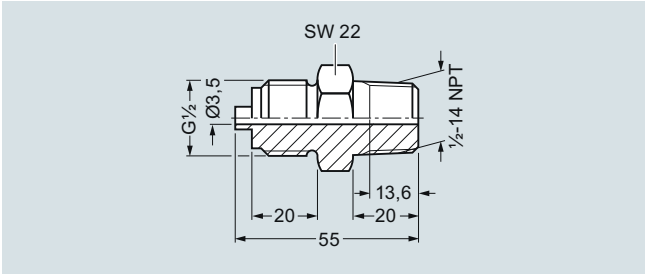

Connection piece with thread ½-14 NPT and connection shank G½ (7MF9001-1CA), dimensions in mm

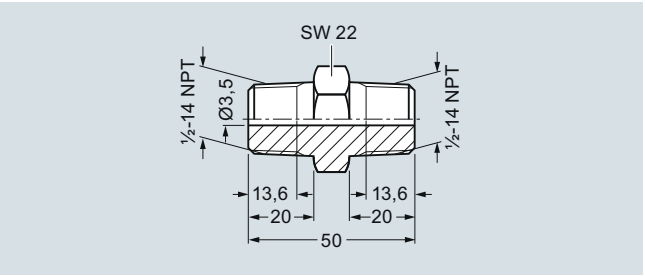

Connection piece with thread ½-14 NPT and thread ½-14 NPT (7MF9001-1DA), dimensions in mm

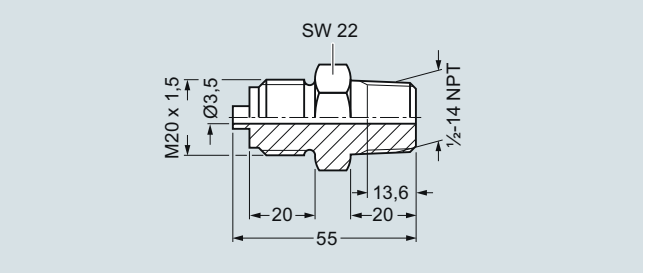

Connection piece with thread ½-14 NPT and connection shank M20 x 1.5 (7MF9001-1EA), dimensions in mm

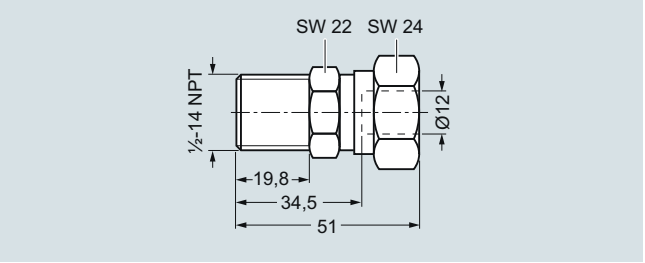

Connection piece with pipe union with ferrule 12 S, ∅ 12 mm and thread ½-14 NPT (7MF9008-1CA and -1CB), dimensions in mm

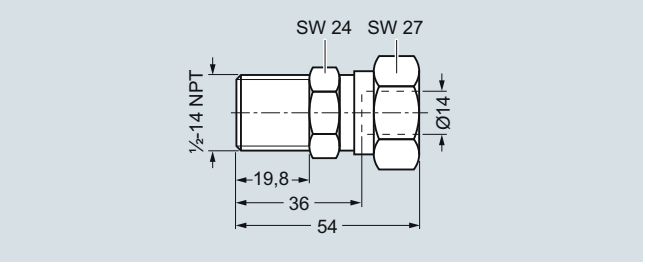

Connection piece with pipe union with ferrule 14 S, ∅ 14 mm and thread ½-14 NPT (7MF9008-1CC and -1CD), dimensions in mm

© Siemens AG 2018

1

Connection glands

Overview

Connection glands to connect medium or differential pressure lines to collars G½ to DIN EN 837-1

- For rated pressures up to PN 630 (9137psi)
- For oxygen only up to PN 250 (3626 psi)

Selection and Ordering data		Article No.
Connection screwed gland for pipelines (weight 0.2 kg)		
Material	Design	
11SMn30 (mat. No. 1.0715)	Standard	**7MF9008-1GA**
X 6 CrNiMoTi 17 12 2 (mat. No. 1.4571/316Ti)	Standard	**7MF9008-1GB**
X 6 CrNiMoTi 17 12 2 (mat. No. 1.4571/316Ti)	Grease-free	**7MF9008-1GC**

Dimensional drawings

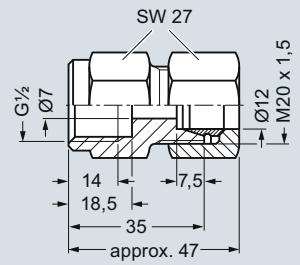

Connection gland 7MF9008-1G., dimensions in mm

© Siemens AG 2018

Overview

Connection parts G½ for pressure gauges and shut-off fittings are available in 3 versions:

- Nipple connection
- Clamping sleeve
- Collar connection piece

Selection and Ordering data

		Article No.
Adapters G½		
for pressure gauges and shut-off fittings		
Nipple connection		
G½ to DIN 16284 (union nut with nipple and gasket); max. working pressure 400 bar (5802 psi); weight 0.1 kg; connection: G½ to DIN EN 837-1; Female thread G½		
Material	Mat. No.	
CuZn39Pb3	CW 614N	**M56340-A0001**
Union nut 9 SMn 28 k Nipple: RSt 37-2	 1.0715 1.0037	**M56340-A0002**
Union nut X 8 CrNiS 18 9 Nipple: X 6 CrNiMoTi 17 12 2	 1.4305 1.4571/316Ti	**M56340-A0003**
Nipple connection		
M20 x 1.5 to DIN 16284 (union nut with nipple and gasket); max. working pressure 400 bar (5802 psi); weight 0.1 kg; connection: M20 x 1.5 to DIN EN 837-1; Female thread M20 x 1.5		
Material	Mat. No.	
Union nut X 8 CrNiS 18 9 Nipple: X 6 CrNiMoTi 17 12 2	 1.4305 1.4571/316Ti	**M56340-A0008**
Clamping sleeve		
G½ to DIN 16283; max. working pressure 400 bar (5802 psi); weight 0.1 kg; Connections: G½ to DIN EN 837-1; Female thread: G½ right-hand G½ left-hand		
Material	Mat. No.	
CuZn39Pb3	CW614N	**M56340-A0004**
9 SMn 28 k	1.0715	**M56340-A0005**
Collar-adapter		
max. working pressure; weight 0.1 kg; Connections: G½ to DIN EN 837-1; Male thread: G½, G½		
Material	Mat. No.	
CuZn39Pb3	CW614N	**M56340-A0006**
9 SMn 28 k	1.0715	**M56340-A0007**

Dimensional drawings

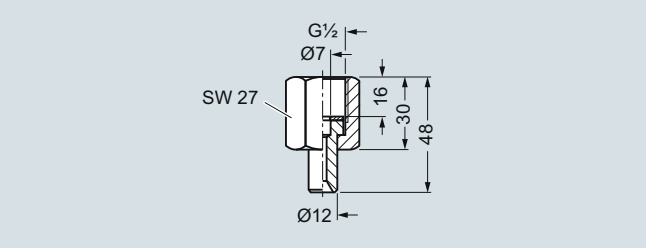

Nipple connection G½ (M56340-A0001 to -A0003), dimensions in mm

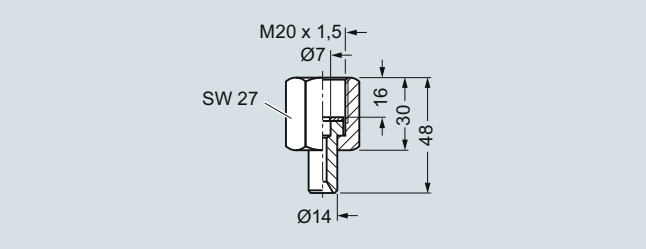

Nipple connection M20 x 1.5 (M56340-A0008), dimensions in mm

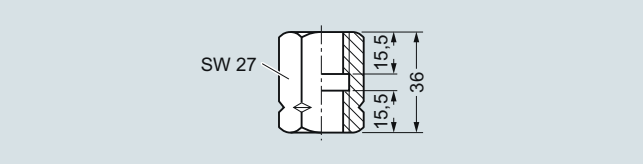

Clamping sleeve (M56340-A0004/-A0005), dimensions in mm

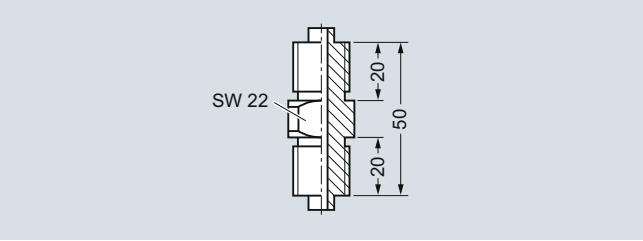

Collar connection piece (M56340-A0006/-A0007), dimensions in mm

© Siemens AG 2018

Water traps, Sealing rings to EN 837-1

Overview

Water traps protect pressure gauges and shut-off fittings from heating up (e.g. by steam) by the water column produced by the water trap.

The max. working temperature is 120 °C (248 °F) at 100 bar (1450 psi), 300 °C (572 °F) at 80 bar (1160 psi) or 400 °C (752 °F) at 63 bar (914 psi). If the temperature of the measured medium is higher, a sufficiently long line has to be connected upstream of the trap to enable heat dissipation.

Design

The water traps are available in U shape (type B) or circular shape (type D) to DIN 16282. They have a weld-on end Ø 20 mm × 2.6 mm on the measurement side. The connection on the device side is a clamping sleeve G½ to DIN 16283.

The water traps are made of steel (P250GH) or stainless steel (X 6 CrNiMoTi 17 12 2)

Water traps are designed as standard for max. operating temperature 120 °C (248 °F) at max. operating pressure 100 bar (1450 psi) (300 °C (572 °F) at 80 bar (1160 psi), 400 °C (752 °F) at 63 bar (914 psi). Water traps for higher operating pressures and temperatures are available on request.

Selection and Ordering data		Article No.
Water traps for pressure gauges and pressure transmitters, max. working temperature 120 °C (248 °F), max. working pressure 100 bar (1450 psi) (or 300 °C (572 °F) at 80 bar (1160 psi), or 400 °C (752 °F) at 63 bar (914 psi)), weight 0.7 kg		
Water trap B to DIN 16282		
Material	Mat. No.	
P235GH	1.0345	**M56340-A0043**
X 6 CrNiMoTi 17 12 2	1.4571/316Ti	**M56340-A0061**
Water trap D to DIN 16282		
Material	Mat. No.	
P235GH	1.0345	**M56340-A0045**
X 6 CrNiMoTi 17 12 2	1.4571/316Ti	**M56340-A0063**

Dimensional drawings

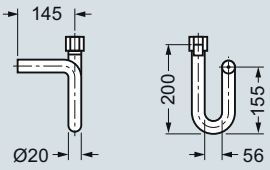

Water traps, type B, M56340-A0043/-A0061, dimensions in mm

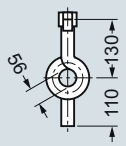

Water traps, type D, M56340-A0045/-A0063, dimensions in mm

Overview

The sealing rings to EN 837-1 are required to seal measuring instruments for pressure with the process connection G½B.

Dimensional drawings

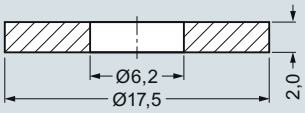

Sealing ring 7MF9007-7A. to EN 837-1, dimensions in mm

Selection and Ordering data	Article No.
Sealing ring to EN 837-1 for thread G½ made of (packing unit 100 pcs)	
• Copper	**7MF9007-7AA**
• Soft iron	**7MF9007-7AB**
• Stainless steel, mat.-No. 1.4571	**7MF9007-7AC**
• PTFE	**7MF9007-7AD**
Accessories	
Test report to EN 10204-3.1	**7MF9000-8AB**
Material acceptance test certificate to EN 10204-3.1	**7MF9000-8AD**

© Siemens AG 2018

Overview

The pressure surge reducer protects the pressure gauge against damage, premature wear and tear and inaccurate/fluctuating indications.

Application

The pressure reducer is used when pulsations occur in the measured medium (e.g. in slow-running vapor engines, piston pumps and compressors), or if drastic fluctuations are likely to occur in the measured medium (e.g. in hydraulic presses and tensile testing machines).

Design

- Enclosure made of brass or stainless steel (mat. no. 1.4571)
- Adjustable nozzle
- Sleeve for connection to the measuring instrument
- Pin for connection to supply lead

Selection and Ordering data

			Article No.
Pressure surge reducer Weight approx. 0.21 kg			
Material	Full-scale value	Weight approx. in kg	
Brass	250 bar (3626 psi)	0.21	**M56340-A54**
Stainless steel	600 bar (8702 psi)	0.21	**M56340-A59**

Dimensional drawings

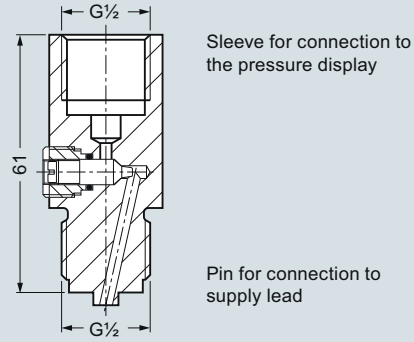

Pressure surge reducer, dimensions in mm

© Siemens AG 2018

Overview

Primary shut-off valves are available in the following versions:

- For non-corrosive liquids, gases and vapors
- For corrosive liquids and gases
- Grease-free for oxygen

The shut-off valves are available in various materials and with various connections (see Selection and Ordering data)

Characteristic curves

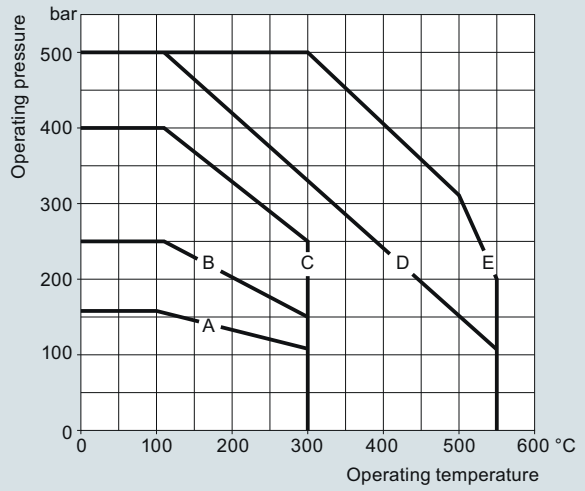

Shut-off valve 7MF9017-1..

Shut-off valve 7MF9017-1.., permissible working pressure as a function of the permissible working temperature

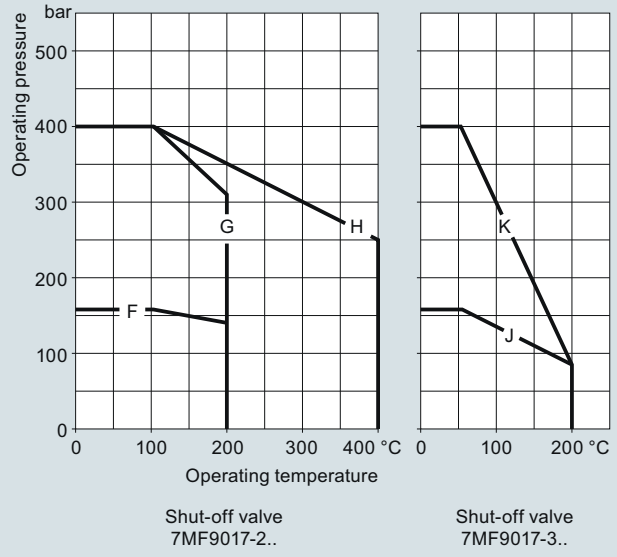

Shut-off valve 7MF9017-2..

Shut-off valve 7MF9017-3..

Shut-off valve 7MF9017-2.. and -3.., permissible working pressure as a function of the permissible working temperature

Dimensional drawings

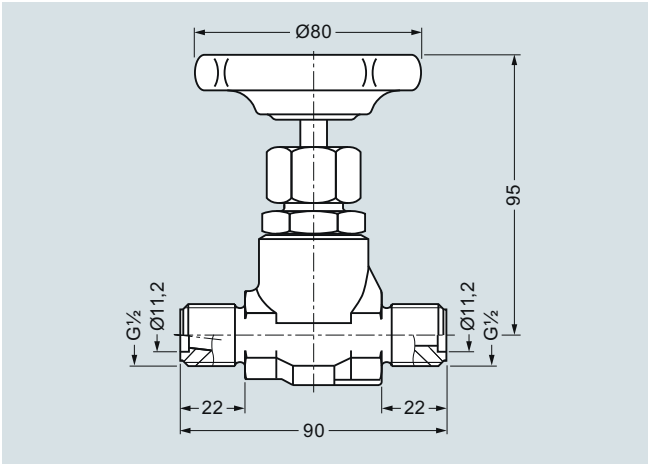

Shut-off valve 7MF9017–1A., dimensions in mm

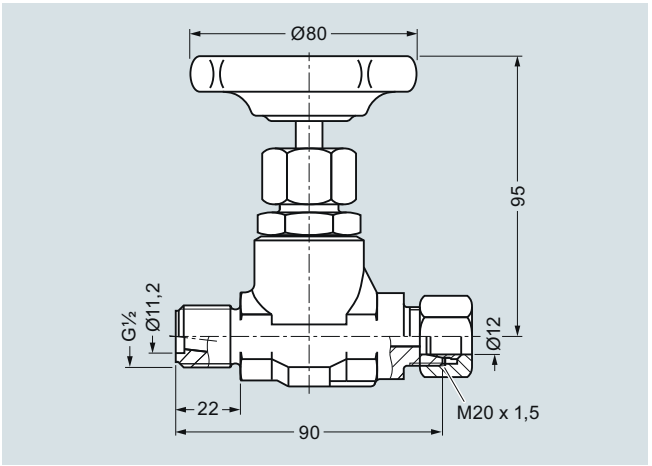

Shut-off valve 7MF9017-1B. and -2B., dimensions in mm

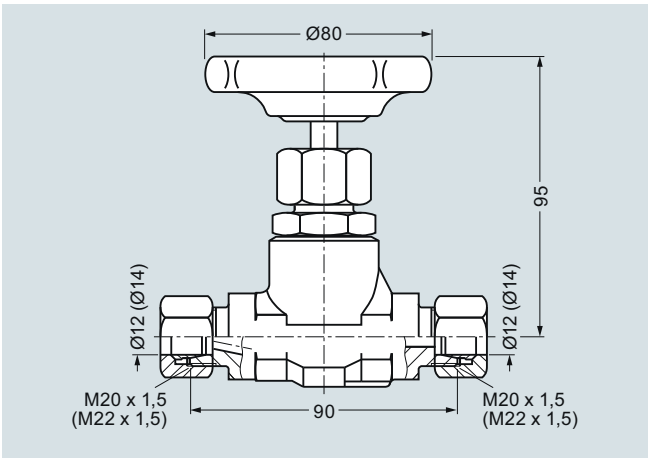

Shut-off valves 7MF9017-1C., -1D. and -2C., dimensions in mm

© Siemens AG 2018

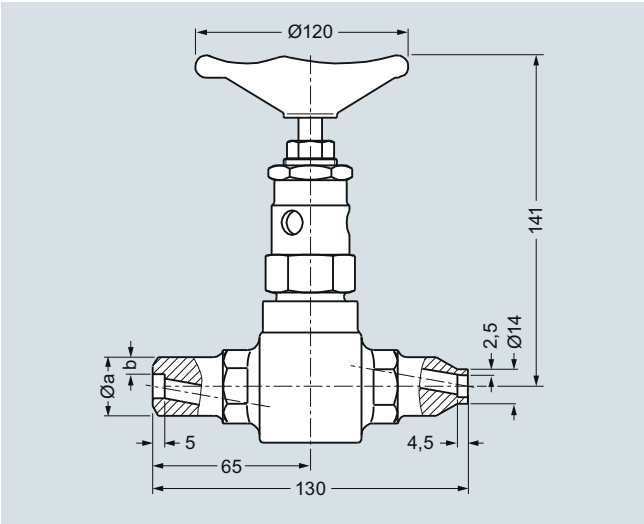

Shut-off valves 7MF9017-, dimensions in mm

Ø A x b	7MF9017-
14 mm x 2.5 mm	1F. and 1G.
21.3 mm x 6.3 mm	1H. and 2H.
24 mm x 7.1 mm	1J., 1K. and 2J.

Selection and Ordering data

Primary shut-off valves, without certificate

Max. working pressure	Charac-teristic[1)]	Material	Mat. No.	Spindle thread	Connections	Approx. weight kg	Article No.
Shut-off valve for non-aggressive liquids, gases and vapors							↗ **7MF9017-1** ■ **A**
↗ Click on the Article No. for the online configuration in the PIA Life Cycle Portal.							
160 bar (2321 psi)	A	P250GH	1.0460	Internal	Threaded socket G½ form R, DIN 19207	0.8	**A**
160 bar (2321 psi)	A	P250GH	1.0460	Internal	Threaded socket G½ form R, DIN 19207 DIN 19207 and pipe union with ferrule for pipe Ø 12 mm, S series	0.8	**B**
400 bar (5800 psi)	C	P250GH	1.0460	Internal	Pipe union with ferrule for pipe Ø 12 mm, S series	1	**C**
400 bar (5800 psi)	C	P250GH	1.0460	Internal	Pipe union with ferrule for pipe Ø 14 mm, S series	1	**D**
500 bar (7252 psi)	D	16 Mo 3	1.5415	External	Welding sleeves Ø 14 mm × 2.5 mm	1.6	**F**
500 bar (7252 psi)	E	11 CrMo 9 10	1.7383	External	Welding sleeves Ø 14 mm × 2.5 mm	1.6	**G**
500 bar (7252 psi)	D	16 Mo 3	1.5415	External	Welding sleeves Ø 21.3 mm × 6.3 mm and Ø 14 mm × 2.5 mm	1.6	**H**
500 bar (7252 psi)	D	16 Mo 3	1.5415	External	Welding sleeves Ø 24 mm × 7.1 mm and Ø 14 mm × 2.5 mm	1.6	**J**
500 bar (7252 psi)	E	11 CrMo 9 10	1.7383	External	Welding sleeves Ø 24 mm × 7.1 mm and Ø 14 mm × 2.5 mm	1.6	**K**
Shut-off valve for aggressive liquids and gases							↗ **7MF9017-2** ■ **A**
160 bar (2321psi)	F	X 6 CrNiMoTi 17 12 2	1.4571/ 316Ti	Internal	Threaded socket G½ form R, DIN 19207 DIN 19207 and pipe union with ferrule for pipe Ø 12 mm, S series	0.8	**B**
400 bar (5800 psi)	G	X 6 CrNiMoTi 17 12 2	1.4571/ 316Ti	Internal	Pipe union with ferrule for pipe Ø 12 mm, S series	1	**C**
400 bar (5800 psi)	H	X 6 CrNiMoTi 17 12 2	1.4571/ 316Ti	External	Welding sleeves Ø 21.3 mm × 6.3 mm and Ø 14 mm × 2.5 mm	1.6	**H**
400 bar (5800 psi)	H	X 6 CrNiMoTi 17 12 2	1.4571/ 316Ti	External	Welding sleeves Ø 24 mm × 7.1 mm and Ø 14 mm × 2.5 mm	1.6	**J**

Accessories

Factory test certificate EN 10204–2.2	**7MF9000-8AB**
Material acceptance test certificate EN 10204-3.1	**7MF9000-8AD**

[1)] See Figure "Permissible working pressure as a function of the permissible working temperature"

© Siemens AG 2018

1

Compensation vessels

Overview

The compensation vessels prevent the level difference which occurs with pressure changes in the pressure lines and which falsifies the measurement.

According to DIN 19211, the temperature in the compensation vessel must be assumed to be 50 K less than the steam temperature in the pipe when calculating the wall thicknesses. This is because the temperature in the compensation vessel during operation can only rise up to the saturated steam temperature.

A material acceptance test certificate A to EN 10204-3.1 is available for the materials from which the compensation vessels are made.

Characteristic curves

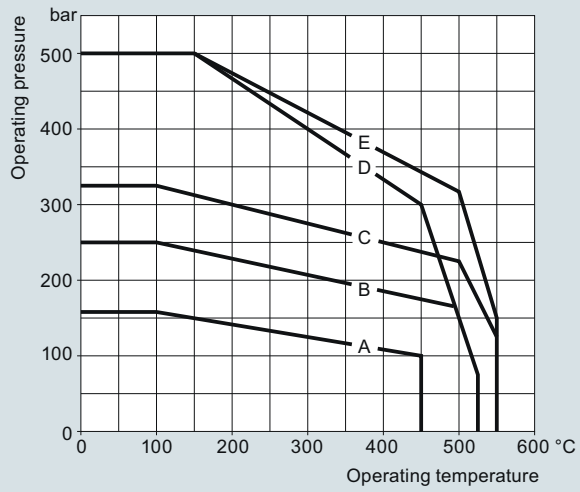

Permissible operating pressure as a function of the permissible operating temperature

Dimensional drawings

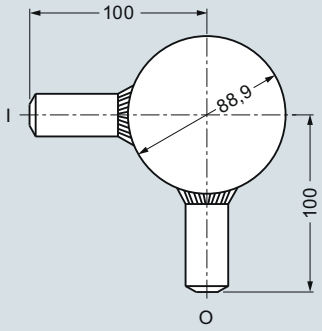

I Input (see Ordering data for dimensions)
O Output (see Ordering data for dimensions)

Compensation vessel 7MF9015-1.., dimensions in mm

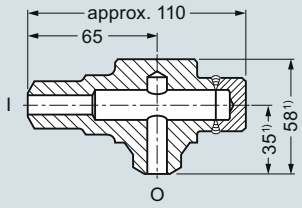

I Input (see Ordering data for dimensions)
O Output (see Ordering data for dimensions)
1) 30 mm longer with 7MF9015-5A.

Compensation vessel 7MF9015-5.., dimensions in mm

Selection and Ordering data

Compensation vessel, without certificate

Max. working pressure	Characteristic[1]	Material	Mat. No.	Connections Input	Output	Approx. contents cm³	Approx. weight kg	Article No. 7MF9015-
↗ Click on the Article No. for the online configuration in the PIA Life Cycle Portal.								
160 bar (2321 psi)	A	16 Mo 3	1.5415	Threaded socket G½, form R, DIN 19207	Threaded socket G½, form V, DIN 19207	250	0.8	1 A
250 bar (3626 psi)	B	16 Mo 3	1.5415	Welding sleeve Ø 21.3 mm × 6.3 mm	Welding sleeve Ø 21.3 mm × 6.3 mm	250	0.8	1 B
250 bar (3626 psi)	B	16 Mo 3	1.5415	Welding sleeve Ø 24 mm × 7.1 mm	Welding sleeve Ø 24 mm × 7.1 mm	250	1	1 C
500 bar (7252 psi)	E	11 CrMo 9 10	1.7383	Welding sleeve Ø 24 mm × 7.1 mm	Welding sleeve Ø 24 mm × 7.1 mm	170	1	1 D
250 bar (3626 psi)	B	16 Mo 3	1.5415	Welding sleeve Ø 33.7 mm × 4.5 mm	Welding sleeve Ø 24 mm × 7.1 mm	700	0.7	1 E
160 bar (2321 psi)	A	16 Mo 3	1.5415	Threaded socket G½, form R, DIN 19207	Threaded socket G½, form V, DIN 19207	20	1.6	5 A
500 bar (7252 psi)	D	16 Mo 3	1.5415	Welding sleeve Ø 21.3 mm × 6.3 mm	Welding sleeve Ø 21.3 mm × 6.3 mm	20	1.6	5 B
500 bar (7252 psi)	D	16 Mo 3	1.5415	Welding sleeve Ø 24 mm × 7.1 mm	Welding sleeve Ø 24 mm × 7.1 mm	20	1.6	5 C
500 bar (7252 psi)	E	11 CrMo 9 10	1.7383	Welding sleeve Ø 24 mm × 7.1 mm	Welding sleeve Ø 24 mm × 7.1 mm	20	1.6	5 D

Accessories

Factory test certificate EN 10204–2.2	**7MF9000-8AB**
Material acceptance test certificate EN 10204-3.1	**7MF9000-8AD**

1) See Figure "Permissible working pressure as a function of the permissible working temperature"

© Siemens AG 2018

Overview

Connection parts are available in the following versions:

- Threaded flange pair G½ with stainless steel gasket
- Nipple G½ form V to DIN 19207
- Union nut G½ made of C 35 to DIN 16284
- Gasket B½ (grooved) to DIN 19207

All connection parts are also available grease-free for oxygen.

Selection and Ordering data	Article No.
Threaded flange pair G½	
• with stainless steel gasket	**7MF9007-4CA**
• grease-free for oxygen, with stainless steel gasket	**7MF9007-4DA**
Scope of delivery:	
2x threaded flanges G½ to DIN 19207; material: P250GH (mat. No. 1.0460)	
4x hexagon screws M10x45 to DIN EN 24014; Material: C35E (mat. No. 1.1181)	
4x hexagon screws M10x50 to DIN EN 24032	
1x gasket G½ (7MF9007-6BA) grooved, to DIN 19207; Material: X 6 CrNiMoTi 17 12 2 (mat. No. 14571/316Ti)	
Only for 7MF9007-4CA!	
1x gasket G½ (7MF9k007-6CA), grease-free for oxygen, grooved, to DIN 19207; Material: X 6 CrNiMoTi 17 12 2 (mat. No. 14571/316Ti)	
Only for 7MF9007-4DA!	
Nipple G½	
to DIN 19207	
• Material: 16 Mo 3 (mat. No. 1.5415)	**7MF9007-4KA**
• grease-free for oxygen, Material: X 6 CrNiMoTi 17 12 2 (mat. No. 1.4571/316Ti)	**7MF9007-4LA**
Union nut G½	
to DIN 16284	
• Material: C35E (mat. No. 1.1181)	**7MF9007-4MA**
• grease-free for oxygen, Material: X 6 CrNiMoTi 17 12 2 (mat. No. 1.4571/316Ti)	**7MF9007-4NA**
Gasket G½	
to DIN 19207, grooved	
• Material: X 6 CrNiMoTi 17 12 2 (mat. No. 1.4571/316Ti)	**7MF9007-6BA**
• grease-free for oxygen, Material: X 6 CrNiMoTi 17 12 2 (mat. No. 1.4571/316Ti)	**7MF9007-6CA**

Dimensional drawings

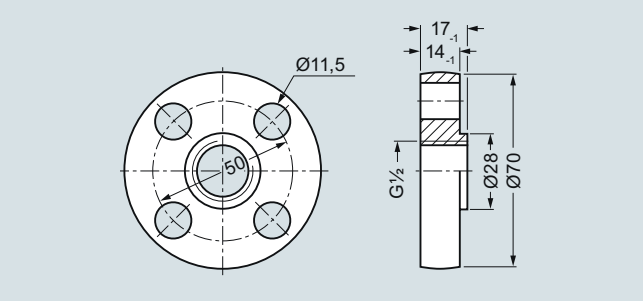

Threaded flange 7MF9007-4CA/-4DA, dimensions in mm

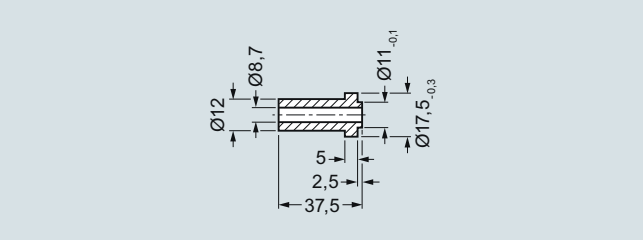

Nipple G½ 7MF9007-4KA/-4LA, dimensions in mm

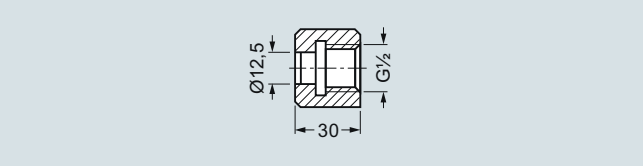

Union nut G½ 7MF9007-4MA/-4NA, dimensions in mm

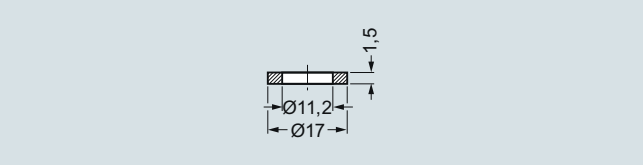

Gasket 7MF9007-6BA/-6CA, dimensions in mm